GUILD ◆ EDITION

# Woodsmith®

Woodsmith.com

Vol. 42 / No. 251

## FIND LOW-COST LUMBER
# PORTABLE SAW MILLS

## This Issue:

**Weekend Project**
Band Saw Boxes

**Cook's Upgrade**
Kitchen Cart

**Tips & Tricks for:**
- Sharpening Turning Tools
- Advanced Router Jigs
- Essentials Tools for Leather

# Woodpeckers®

## Precision Woodworking Squares

- Guaranteed accurate to ±.0085° for life.
- One-piece blade machined to exacting tolerances.
- Wall-mountable storage case.
- Available in inch or metric.

UNMATCHED ACCURACY
LIFETIME Woodpeckers GUARANTEE
EST. 1988

12" 1281 Square....**$119.99**
12" 1282SS Stainless Steel Square.....**$159.99**

## Precision T-Squares

- Precisely spaced 1mm holes machined every 1/16".
- Laser engraved scale accurate to ±.004".
- Outer edges machined to a 30° bevel for easy reading.
- Wall-mountable storage case.

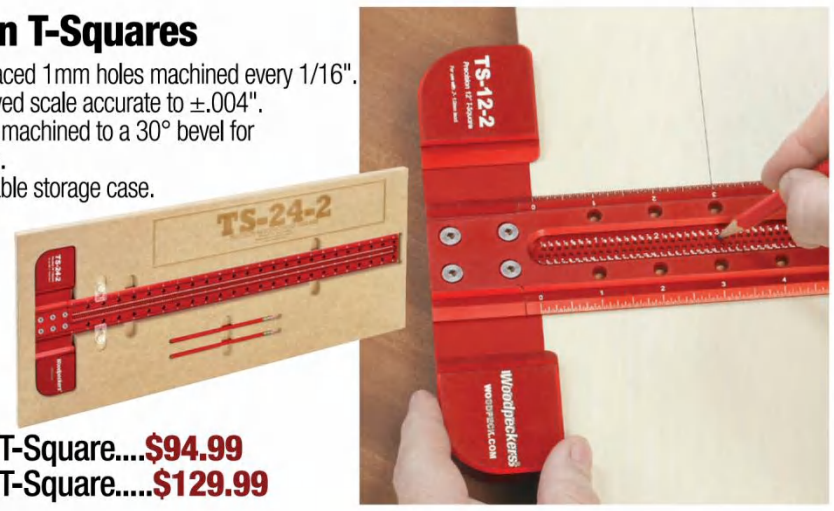


12" TS-12 T-Square....**$94.99**
24" TS-24 T-Square.....**$129.99**

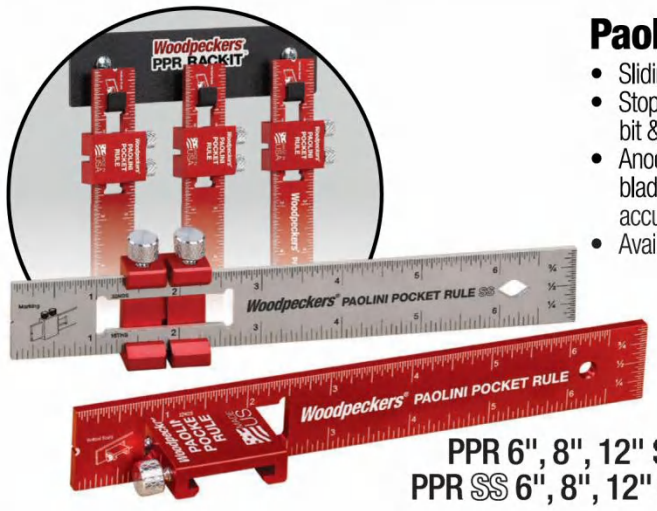


## Paolini Pocket Rules

- Sliding stop simplifies repetitive marking.
- Stop doubles as stand to set router bit & saw blade height.
- Anodized aluminum or stainless steel blade with laser engraved scale accurate to ±.004".
- Available in inch, metric or combination.

PPR 6", 8", 12" Set & Rack-It.....**$124.99**
PPR SS 6", 8", 12" Set & Rack-It....**$149.99**

## Saddle T-Squares

- Scribing holes on 1/32" spacing.
- One-piece construction with 3/4" deep wrap-around marking.
- Saddle-T Rack-It holds all 4 sizes of Saddle T-Squares.
- Available in inch or metric.

Saddle T-Square Set & Rack-It.....**$299.99**

## Clamping Squares PLUS & CSP Clamps

- Positions stock at right angles for joinery & fastening.
- Precision milled for both inside & outside alignment.
- Works with any clamp.
- CSP Clamps add speed & convenience.

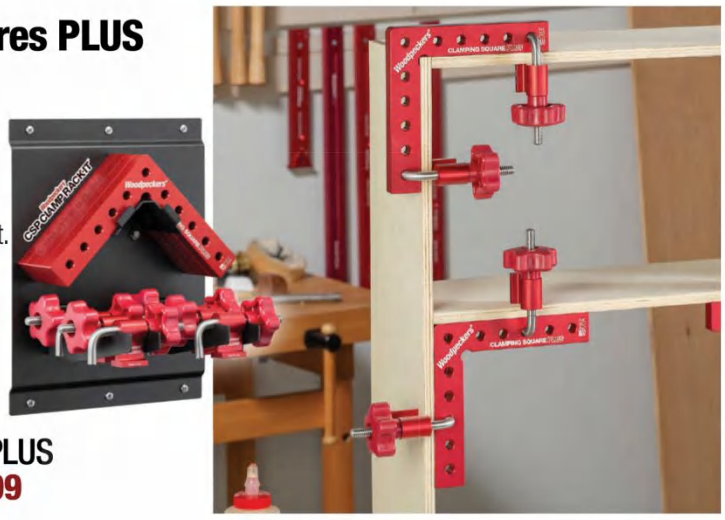


Clamping Squares PLUS Rack-It Kit....**$239.99**

## Clamp Rack-It™

- Holds up to 6 heavy-duty parallel jaw clamps.
- Installs on any stud or solid wall surface.
- Simple installation with (2) lag bolts *(included)*.

Clamp Rack-It 4-Pack....**$119.96**

Clamps not included.

# ULTRA·SHEAR™ by Woodpeckers®

## Parting Tool-Ci

- Creates crisp, clean, narrow parting cuts.
- Sharpest, longest lasting carbide inserts on the market.
- 3/32" cutting width saves stock & minimizes resistance.
- Two insert profiles:
  - Fluted cutter installed
  - Square cutter optional

Parting Tool-Ci....**$79.99**

## Woodturning Tools

- Eliminate the drudgery of sharpening with nano-grain carbide inserts mounted to hardened alloy steel shafts.
- Sharpest, longest lasting carbide inserts on the market.
- Exclusive shaft design delivers both fast shaping & fine finishing.
- Square, round & detail tools available individually or as a set.

Mid-Size Woodturning Tool Set ....**$269.99**

**Woodpeck.com**

MADE IN USA

## Offset Base System

Made for Festool Domino

- Attaches to both Festool Domino DF-500 & DF-700 XL.
- Wider, deeper referencing surface improves stability.
- Precision-milled spacers center mortise on standard dimensions.
- Outrigger carries stops for accurate repeat spacing.

**Offset Base System with Systainer Case....$429.99**

Domino not included.

## Parallel Guide System

Made for Festool Track Saws

- Makes repetitive, parallel cuts with table saw accuracy.
- Maximum rip capacity of 52".
- Narrow stock guides deliver accurate results down to 1/4".

**Parallel Guide System with Systainer Case....$429.99**

Saw not included.

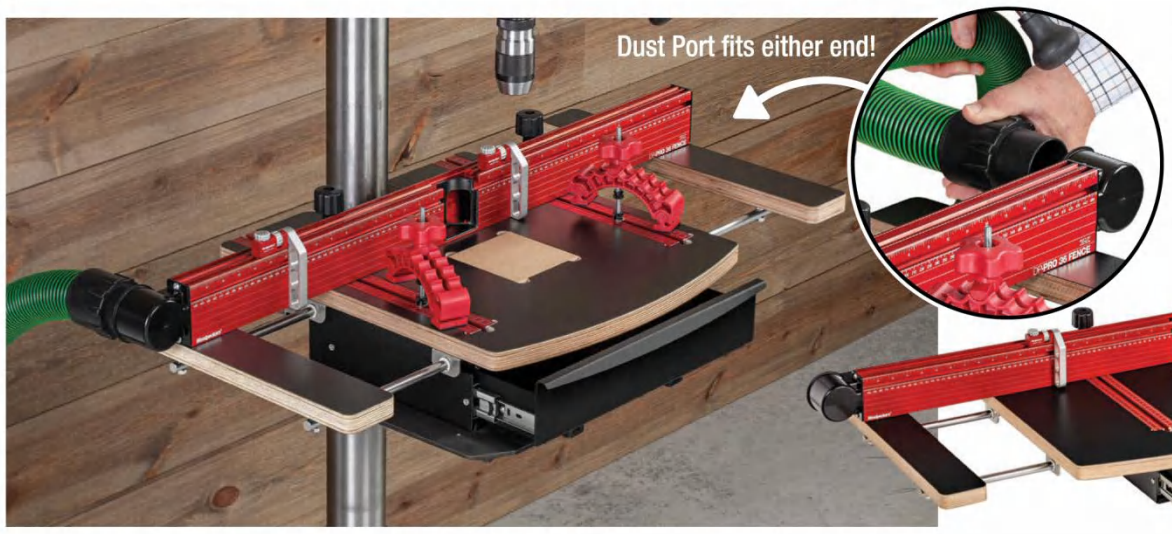


## DP•PRO Drill Press Table System

NEW TOOL

- DP-PRO Fence integrates dust collection & delivers accuracy.
- Micro-adjustable DP-PRO Flip Stops.
- DP-PRO Drawer Base simplifies installation on any drill press.
- DP-PRO Tables are full 1" thick with laminate top & bottom.
- Extension Wings for long material support.
- Drawer Base and Fence compatible with all drill press tables.

**DP•PRO Master System 48/48.....$439.99**
**DP•PRO Master System 48/36.....$419.99**
**DP•PRO Master System 36/36.....$389.99**
**DP•PRO Master System 36/24.....$369.99**

## Slab Flattening Mill PRO

- Wider, thicker, thinner & cleaner than the original.
- Router carriage now has adjustable height & built-in dust ports.
- Standard width of 48-1/2" expands to 62" with optional extension.
- Standard length of 59" expands to 132" with optional extension.
- Flatten stock as thin as 3/4" & up to 3-7/16" without shimming.
- Straight-line edges on stock up to 2" thick.

**Rail can be positioned for narrower slabs or all the way to the edge!**

**Basic Slab Flattening Mill PRO.....$899.99**
**Extended Slab Flattening Mill PRO.....$1149.99**

Router, plywood base & connection hoses not included.

# ULTRA•SHEAR™ by Woodpeckers®

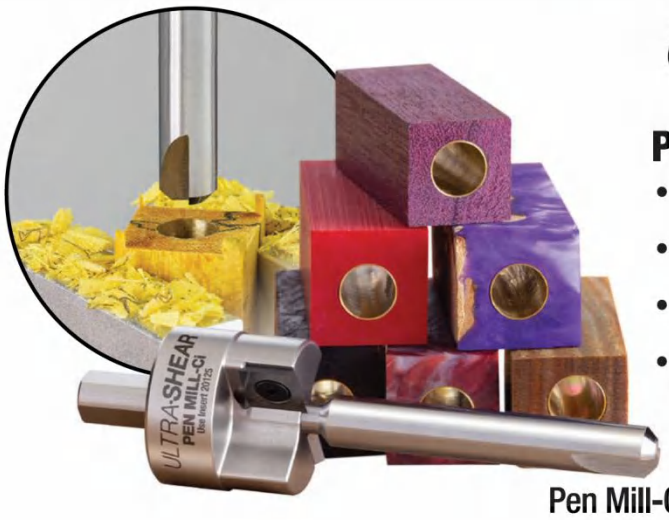


## Pen Mill-Ci

- Trims pen blanks square & flush with insert.
- Razor-sharp carbide inserts hold up to exotic materials.
- 12 Pilot Reamers cover almost every pen kit made.
- Cleanest cutting, longest lasting pen mill on the market.

**Pen Mill-Ci 13-Pc Set....$169.99**

## Pen Mandel System

- Collets on both ends perfectly center & lock the mandrel shaft.
- Tailstock can adjust to exactly the length of your pen project.
- Fits all #2 morse taper head & tail stocks.
- Drive & live centers precision turned from stainless steel.
- Works with almost all pen bushings.
- Matching Precision Pen Bushings available for most popular pens.

**Pen Mandrel System ....$139.99**

*For more sizes & ordering options for these tools plus hundreds more, visit* ***Woodpeck.com***

Woodsmith

**EXECUTIVE EDITOR** Phil Huber
**ASSISTANT EDITORS** Erich Lage, Logan Wittmer
**CONTRIBUTING WRITERS** Bryan Nelson, Jimmy Clewes, Matt Cremona

**EXECUTIVE ART DIRECTOR** Todd Lambirth
**SENIOR ILLUSTRATOR** Dirk Ver Steeg
**SENIOR GRAPHIC DESIGNERS** Bob Zimmerman, Becky Kralicek
**CONTRIBUTING ILLUSTRATOR** Erich Lage

**CREATIVE DIRECTOR** Chris Fitch
**PROJECT DESIGNER** Dillon Baker
**PROJECT DESIGNER/BUILDER** John Doyle
**CAD SPECIALIST** Steve Johnson
**SHOP CRAFTSMAN** Marc Hopkins

**CONTRIBUTING PHOTOGRAPHERS** Chris Hennessey, Jack Coyier

**SENIOR ELECTRONIC IMAGE SPECIALIST** Allan Ruhnke

**VP & GM, HOME GROUP** Brian VanHeuverswyn
**ADVERTISING DIRECTOR** Jack Christiansen
847-894-4649
jchristiansen@aimmedia.com
**AD PRODUCTION COORDINATOR** Kim Hoff
**PRESIDENT, HOME GROUP** Peter H. Miller

HOME GROUP
ACTIVE INTEREST MEDIA

**Woodsmith**® (ISSN 0164-4114) is published bimonthly by Cruz Bay Publishing, Inc., 2143 Grand Ave, Des Moines, IA 50312.
**Woodsmith**® is a registered trademark of Cruz Bay Publishing.
**Copyright**© 2020 Cruz Bay Publishing, Inc. An Active Interest Media Company. All rights reserved.
**Subscriptions:** Single copy: $6.95.
**Canadian Subscriptions:** Canada Post Agreement No. 40038201. Send change of address information to PO Box 881, Station Main, Markham, ON L3P 8M6. Canada BN 82564 2911
**Periodicals Postage Paid** at Des Moines, IA, and at additional offices.
**Postmaster:** Send change of address to *Woodsmith*, Box 37274, Boone, IA 50037-0274.

Printed in U.S.A.

WoodsmithCustomerService.com

**ONLINE SUBSCRIBER SERVICES**

- **VIEW** your account information
- **PAY** your bill
- **RENEW** your subscription
- **CHANGE** your mailing or e-mail address

**CUSTOMER SERVICE** Phone: 800-333-5075 weekdays

**SUBSCRIPTIONS**
Customer Service
P.O. Box 842
Des Moines, IA 50304-9961
subscriptions@aimmedia.com

**EDITORIAL**
Woodsmith Magazine
2143 Grand Avenue
Des Moines, IA 50312
woodsmith@woodsmith.com

ACTIVE INTEREST MEDIA

PRESIDENT & CEO **Andrew W. Clurman**
SENIOR VICE PRESIDENT, TREASURER & CFO **Brian Sellstrom**
SENIOR VICE PRESIDENT, OPERATIONS **Pat Fox**
VICE PRESIDENT, PRODUCTION & MANUFACTURING **Barb Van Sickle**
VICE PRESIDENT, PEOPLE & PLACES **JoAnn Thomas**
AIM BOARD CHAIR **Efrem Zimbalist III**

from the editor

# Sawdust

***This issue sums up why I love woodworking.*** The projects hit for the cycle covering gifts, home furniture, shop-made tools, workshop upgrades, and heirloom classics. It's worth reading each of the project articles even if you don't plan on building it. There are so many lessons to learn that you can apply to the projects you do plan to make.

I've been thinking about why I build things. There's the joy of seeing people open gifts I've made and the delight in learning a new skill. But the deeper reason is it's my way (albeit small) of seeing the world and making it a little better. And I hope you can make your world better, too.

**HEARD ON THE SHOPNOTES PODCAST**

**Q; What critters have you found in your shop?**

I'm always shooing birds from my garage, but I recently found a bird's nest in the nail pocket of a tool belt that hangs on my pegboard. I guess it's not seen much use. Again, my thanks to "Task Force Woodsmith" for the excellent content and being the woodworker's best companion. I'm very much looking forward to what's to come. — Andrew Brown

*New episodes of the ShopNotes podcast drop every week. Subscribe wherever you get podcasts or visit www.Woodsmith.com/podcast*

**CONTRIBUTING EDITOR**

Over the past 36 years, Jimmy Clewes has been teaching and demonstrating woodturning all over the world. During the winter months, Jimmy teaches out of his home in Las Vegas, Nevada. During the months that he's not teaching, Jimmy can often be found exploring the desert with a metal detector in hand, prospecting for gold.

# contents

No. 251 • October/November 2020

## Projects


weekend project

**Band Saw Boxes . . . . . 20**

These three boxes will take your band saw skills to new heights. Each one starts as a single blank and all the parts are revealed in a unique sequence of cuts.

designer project

**Kitchen Cart . . . . . 26**

Who needs an island with this cart around? The large, thick top works as a prep and serving surface. The case below offers handy storage. And you can roll it anywhere.

heirloom project

**Pie Crust Table . . . . . 34**

Here's a woodworking tour de force in a compact package. This beautiful table incorporates turning, carving, dovetails, and more. The result is an eye-catching showpiece.

fine tool

**Miter Plane . . . . . 42**

This traditional hand plane style blends stunning looks with glass smooth surfaces. Combine metalworking with some woodworking and you have one amazing tool.

shop project

**Sander Shelf . . . . . 50**

Organizing your shop never looked so good. This Shaker-inspired design corrals your power sanders, discs, and belts so you know just where to find them.


## Departments


from our readers

**Tips & Techniques . . . . . 6**

router workshop

**Advanced Router Jigs . . . . . 10**

woodworking technique

**Sharpening Turning Tools . . . . . 14**

working with tools

**Leather Tools for Woodworkers . . . . . 56**

all about

**Working with A Sawyer . . . . . 60**

**Sources . . . . . 66**

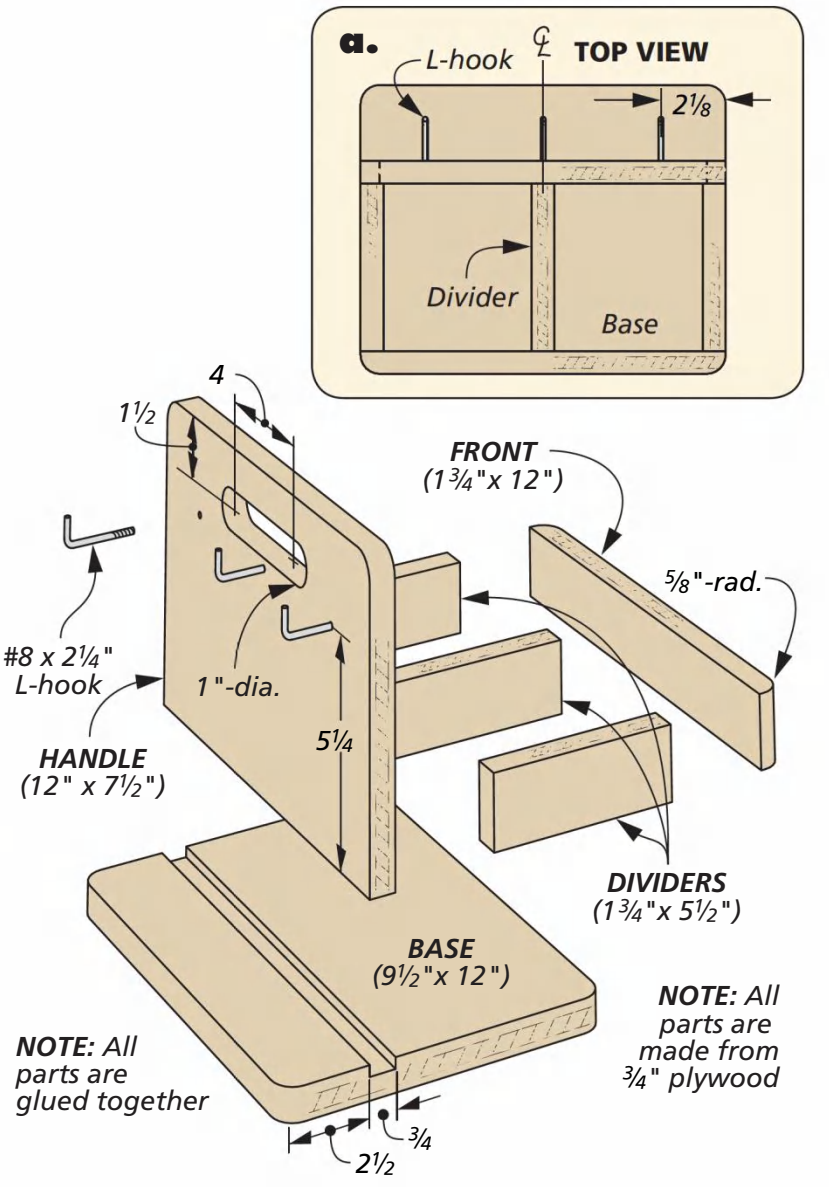


## Upscaled Screw Container

One of my favorite brands of screws comes in click-top plastic containers in a couple of different sizes. On a recent trip to the hardware store, I noticed the screw display hanging up on pegboard hooks. This gave me an idea to store the containers in my shop.

**HANGING TOTE.** As you can see in the photo above, I built a tote to store and mobilize the containers. On one side, there are three hooks to hang the smaller containers. The opposite side has two cubbies for the larger size screw containers.

**PLYWOOD.** The tote is made from plywood. A handle is cut in the upright and the tote is assembled with butt joints. It's the perfect way to store hardware, or Legos, as my kids discovered.

*James DeMira*
*Creston, Iowa*


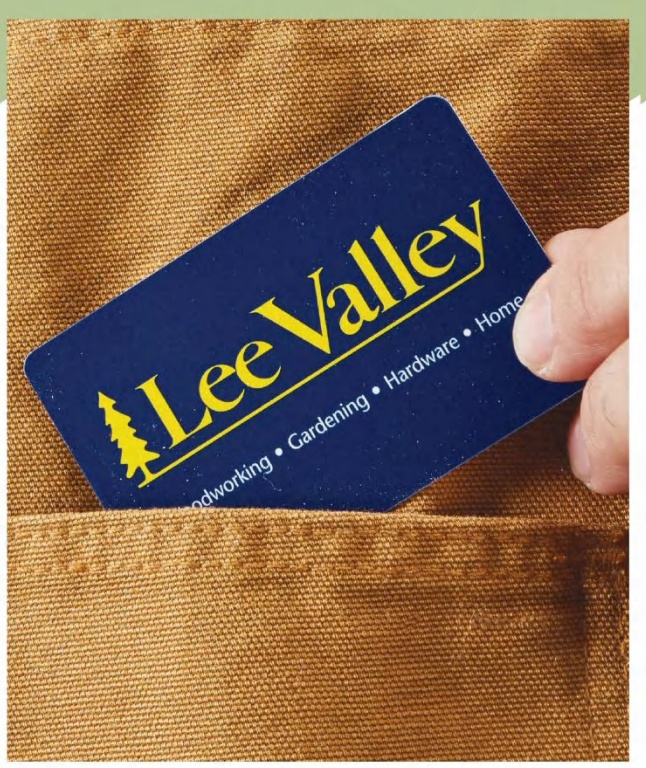


## SUBMIT A TIP TO WIN

### GO ONLINE

If you have an original shop tip, we would like to hear from you and consider publishing your tip in one or more of our publications. So jump online and go to:

**SubmitWoodsmithTips.com**

You'll be able to tell us all about your tip and upload your photos and drawings. You can also mail your tips to "Woodsmith Tips" at the editorial address shown on page 2. We will pay up to $200 if we publish your tip.

### THE WINNER!

Congratulations to Paul DiPastena, the winner of a $100 *Lee Valley* gift card.

# QUICK TIPS

**Flag Small Parts.** *Charles Vogan* of *Grottoes, VA* discovered an easy way to keep track of small parts while he's cutting them. By wrapping the part with a small flag of painter's tape, it's easy to keep track of that small brass pin or dowel when it rolls off onto the floor and under the workbench.

**Secure Your Plugs.** *Ken Marciniak* of *Rolling Prairie, IN* found a great solution to a common problem — extension cords coming unplugged. By wrapping the plug with a couple of twists of a large, rubber twist tie (available at most hardware stores), the plugs stay connected so he can keep working.

Illustrations: Becky Kralicek

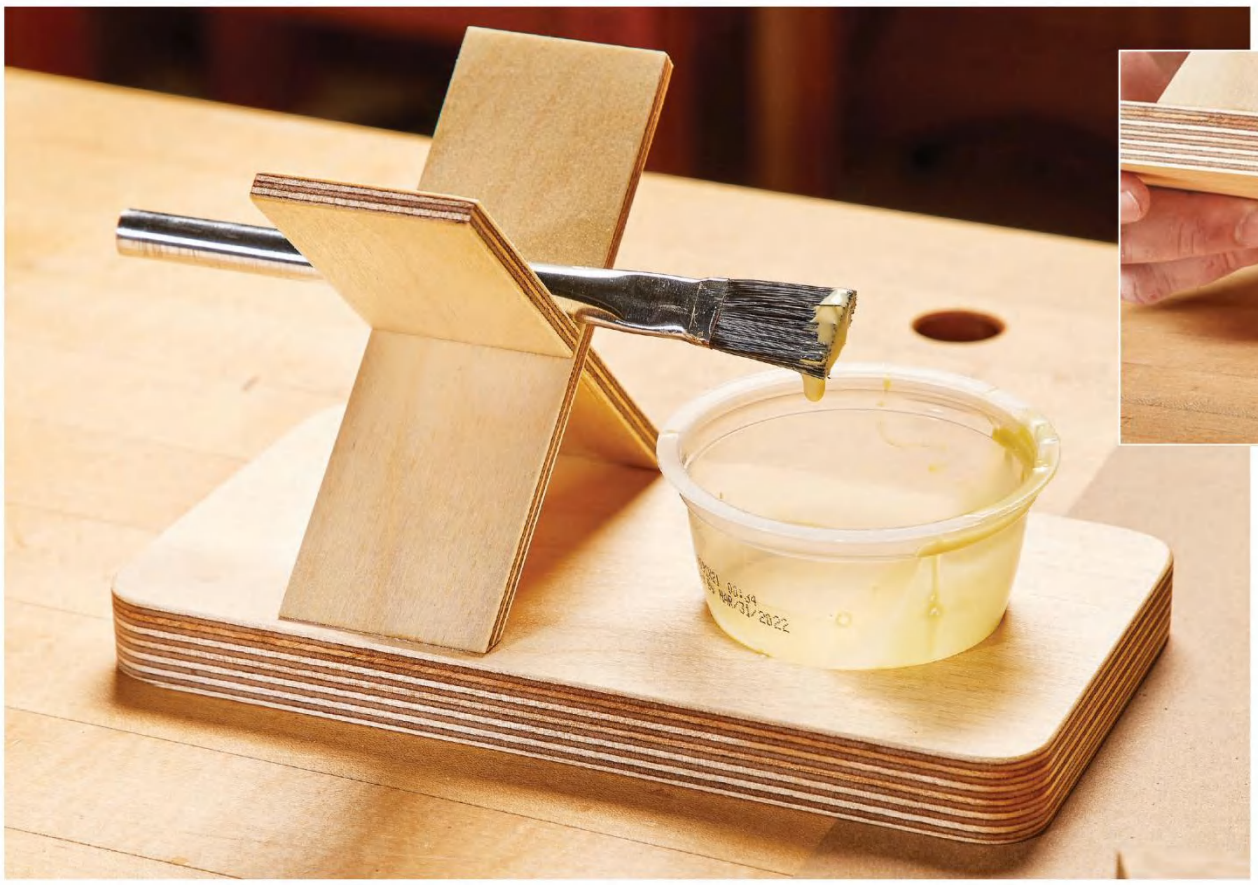

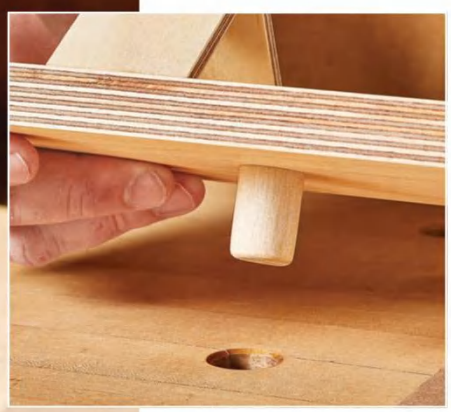

◀ The dowel on the bottom of the base keeps the holder where you put it during a glueup.

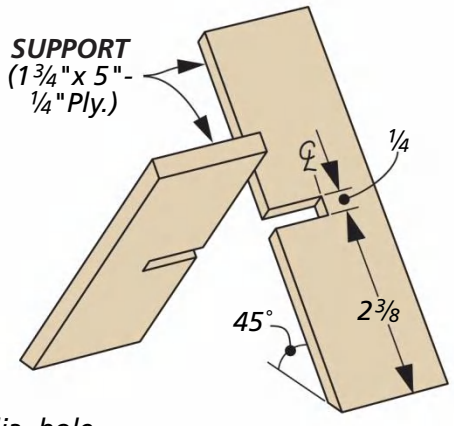


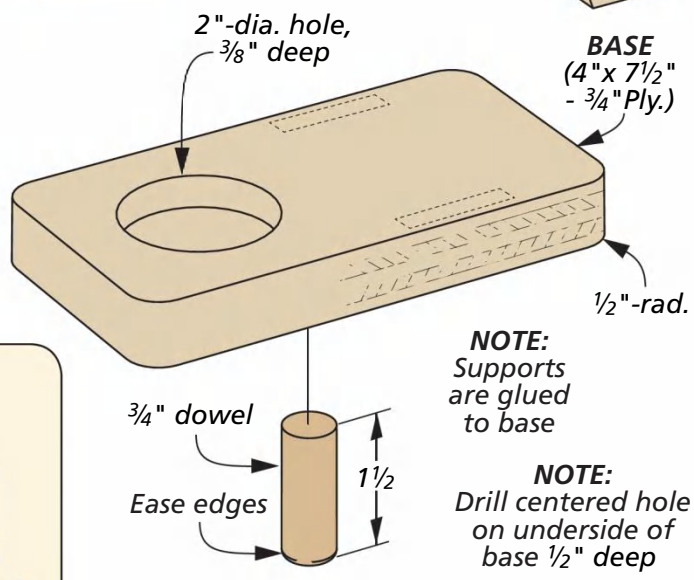


## Glue Brush Holder

On a recent visit to the website *Etsy*, I discovered a woodworker selling cigar holders. While I don't smoke cigars, I thought it was a clever idea to hold my glue brush during glueups.

**X-WING.** The small X-shaped holder is made from plywood scraps half lapped together, and is the perfect place to rest a glue brush during an assembly, as you see in the photo. I drilled a recess for a disposable plastic glue cup. On the bottom, I installed a large dowel so I can slip the glue holder into a dog hole to keep it in place. Now, glueups just got a whole lot easier, and cleaner.

*Paul DiPastena*
*Liverpool, New York*

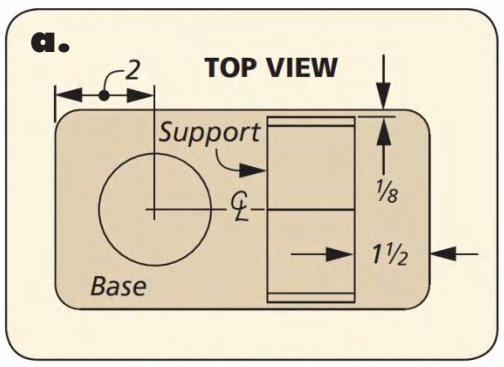



DIGITAL WOODSMITH

RECEIVE FREE ETIPS BY EMAIL

Now you can have the best time-saving secrets, solutions, and techniques sent directly to your email inbox. Simply go to:

**Woodsmith.com**
and click on,

**Woodsmith eTips**

You'll receive one of our favorite tips by email each and every week.

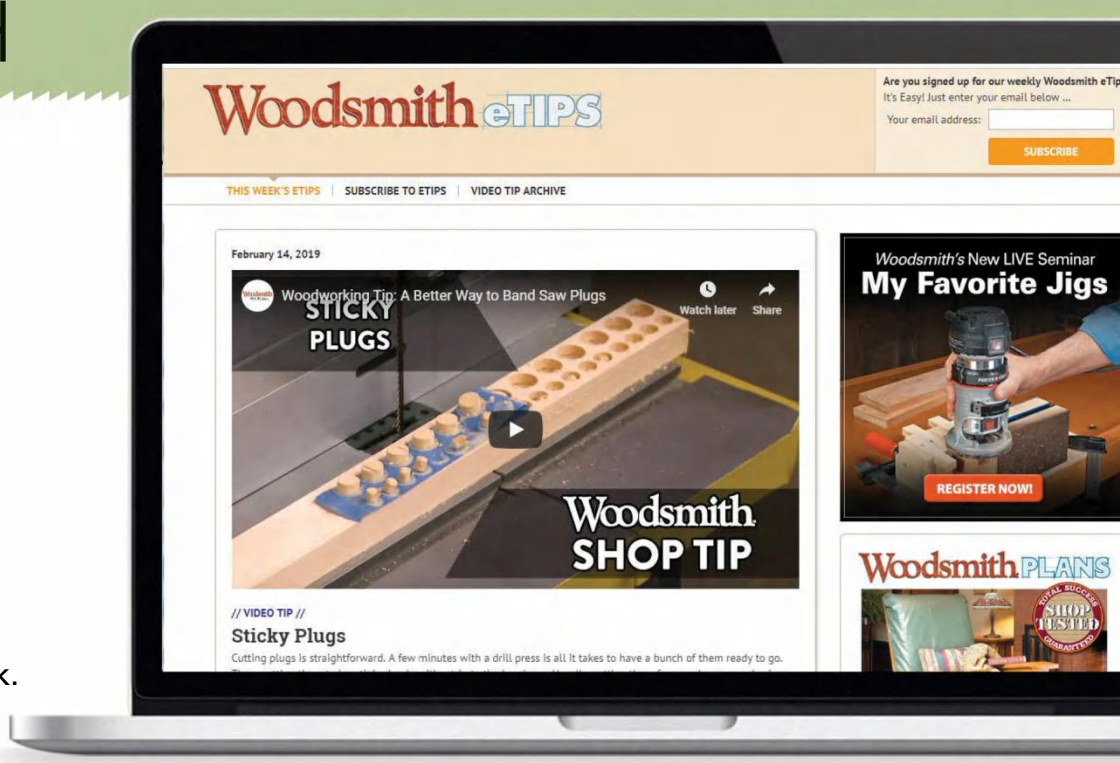

# QUICK TIPS

**Dowel Pegboard Hook.** *Ralph Visco* of *Lima, OH* found that the shape of a many pegboard hooks get in the way and can make it awkward to get a tool off its holder. Instead, he discovered that the ¼" dowels that come in small packages make perfect tool holders. The dowels fit the pegboard and are great for hanging items up.

**Plastic Sign Protector.** *William Collett* of *Bettendorf, IA* found a good use for old plastic political and yard sale signs. William uses them as an assembly mat when he's working on a project. They're usually available for free after election season, and they can be used multiple times before being discarded.


EST 1928

WOODCRAFT®

Over 75 Stores Nationwide – Stop In And Visit With Us!

QUALITY WOODWORKING TOOLS • SUPPLIES • ADVICE®

A Place For Everything

Maximize the space in your shop with shelving, storage racks, Systainers, specialty bins, plans for cabinet building and much more from Woodcraft®.

For A Free Catalog Or To Find Your Local Woodcraft Store, Visit woodcraft.com Or Call 800-225-1153. Follow Us: 20WS11H

# Advanced Router Jigs

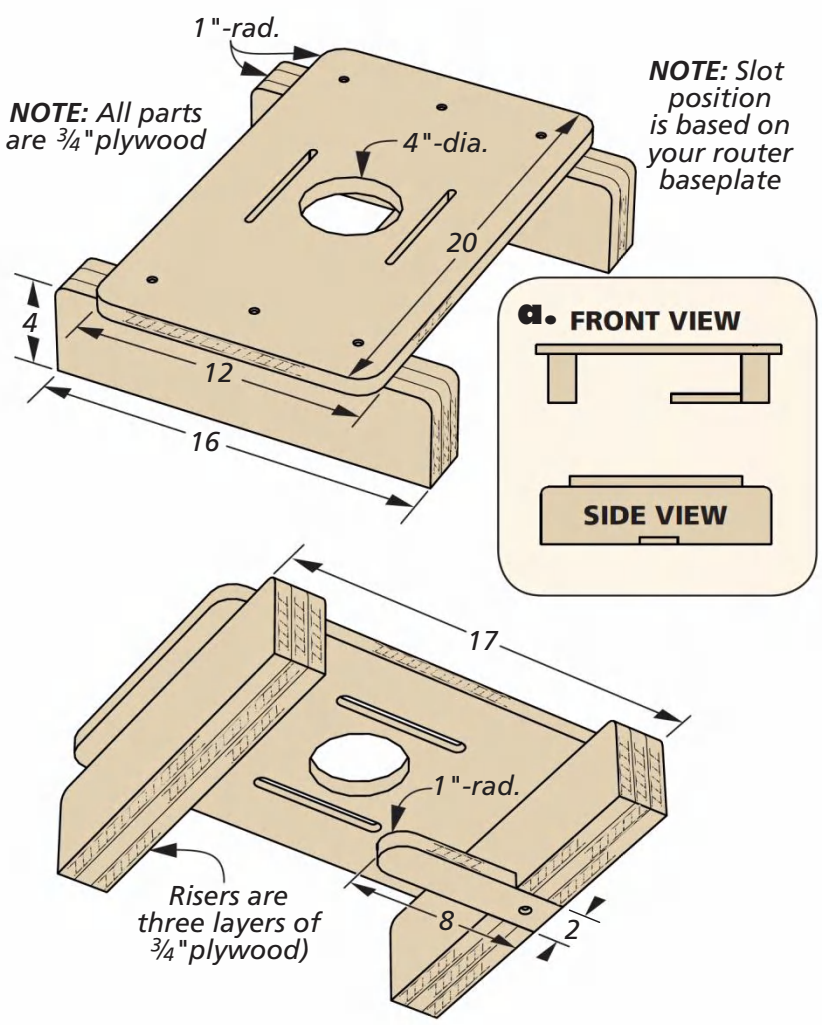


When it comes to versatile tools in the shop, the router is king. Whether handheld or in a table, the router can tackle most shop tasks with ease. However, there are times when you need to outfit your router with a jig or an add-on to make a job a little easier. Here are two of my favorites.

## MOLDING JIG

Large moldings can be made using a combination of router bits that fit the individual sections of the profile. For example, a fillet can be made with a straight bit. A cove can be formed with a core box bit. And a radius can be formed with an ovolo bit (a bearingless roundover bit).

Straight sections of moldings can be made easily with an edge guide or at the router table. Things start to get a little more interesting when the molding is curved, such as a gooseneck molding, like you see in the photo above. This jig allows the router to reference off the molding's curve and create a profile that follows it.

**JIG OVERVIEW.** The jig is fairly simple to build and is made of three parts. First are the sides (or risers) which elevate the router off the bench. These need to be taller than the desired molding height so the router passes over it. Second is the follower which will guide the jig along the curvature of the molding and act like a cut limiter. Lastly is the platform which holds the router. This needs to allow the router to slide left to right to adjust the position of the bit relative to the follower.



Written by: Matt Cremona

**BUILDING THE JIG.** The nice thing about a jig like this is you can build it as simple or complex as you want. As you can see in the photos, this jig is built out of Baltic birch plywood. The risers are glued up from three layers and have a radius cut on the top corners. Again, size these so they are slightly taller than the molding you're cutting. On one riser, cut a notch to accept the follower.

The follower is made out of Baltic birch plywood, and screwed to the risers. I made a few of the followers, as they're consumable.

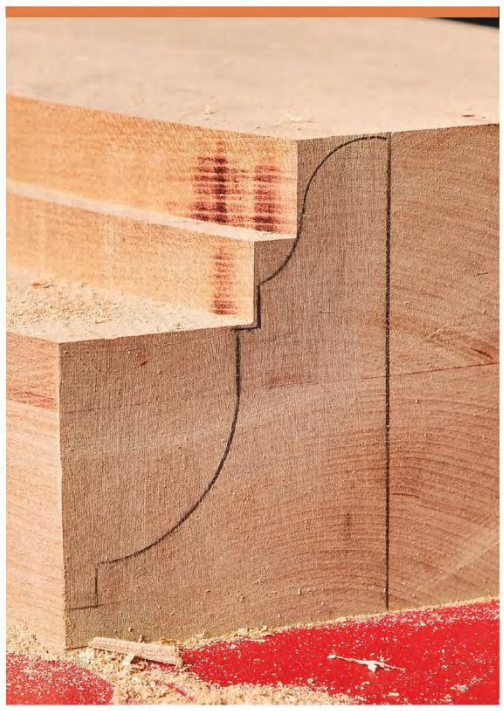

Draw the profile on the end of the stock and use a straight bit to remove most of the waste.

When cutting a rabbet in a workpiece, you'll often end up routing into the follower and need to replace it. I position the follower so it's about a quarter of the way into the router bit opening (photo at right).

The platform has a large opening for the router bit, flanked by two slots. These slots align with the carriage bolts on my *Triton* router and offer a way to mount the baseplate to the platform. The entire platform is screwed onto the risers.

## USING THE JIG

Using the jig isn't too complicated. Start by forming the blank for the molding. Cut the curvature along its edge and leave the stock a little long. Draw the desired profile onto the end of the blank, as in the photo at left, and stick the blank down to a worksurface with two-sided tape.

Most profiles will have a lot of waste that needs to be removed before the profile can be formed. Start with a straight bit to rough out the waste and to get comfortable using the jig. The router can be moved left to right relative to the follower by loosening the carriage bolts and the depth can be adjusted to get the bit into the correct position. Use the drawing on the end of the blank as reference to set the cut location and lock everything down.

A view of the underside of the jig shows the slots for the carriage bolts, the bit opening, and the position of the follower in relation to the router bit.

**MAKING THE CUT.** Now, the router is guided along the molding's curve; keeping the follower in contact with the blank while keeping the jig perpendicular to the curvature of the molding. It's a bit of a swinging dance as the router is moved through the cut. These first roughing cuts help to get you familiar with the motion of the cut. Once the cut is complete, take a look at the result. If the jig was not following perpendicularly, the cut width will show some variance. Adjust the swing of the jig on the subsequent cuts.

After the profile is roughed out, you'll use individual profile bits to create the desired profile. If the molding is tall, a collet extension can be used to reach the bottom of the profile. Large moldings typically have large coves — larger than the biggest core box bits. These large coves can be approximated with multiple stepped passes with a large bit and blended with a gooseneck scraper and sandpaper.

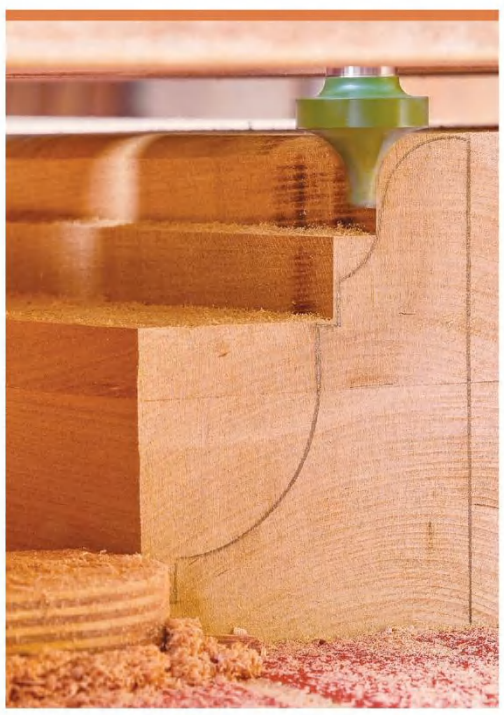

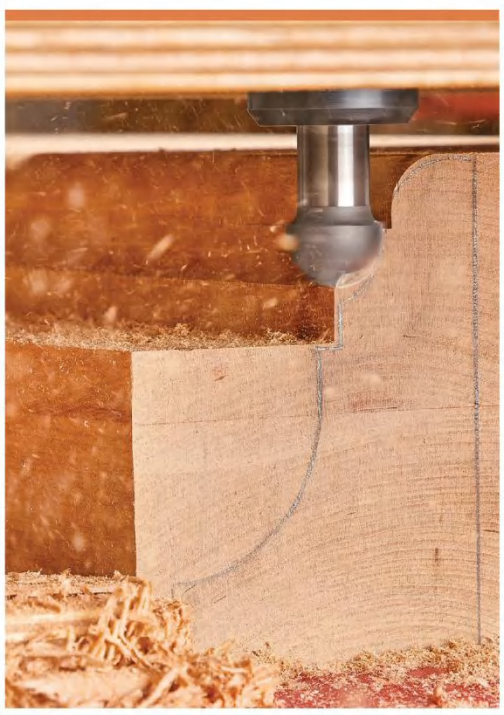

After creating a series of stepped cuts with a straight bit, switch over to the profile bits to rough in the shape. Here, I'm using a cove bit and a corebox bit to form a large ogee profile on the top of the molding.

Illustrations: Bob Zimmerman

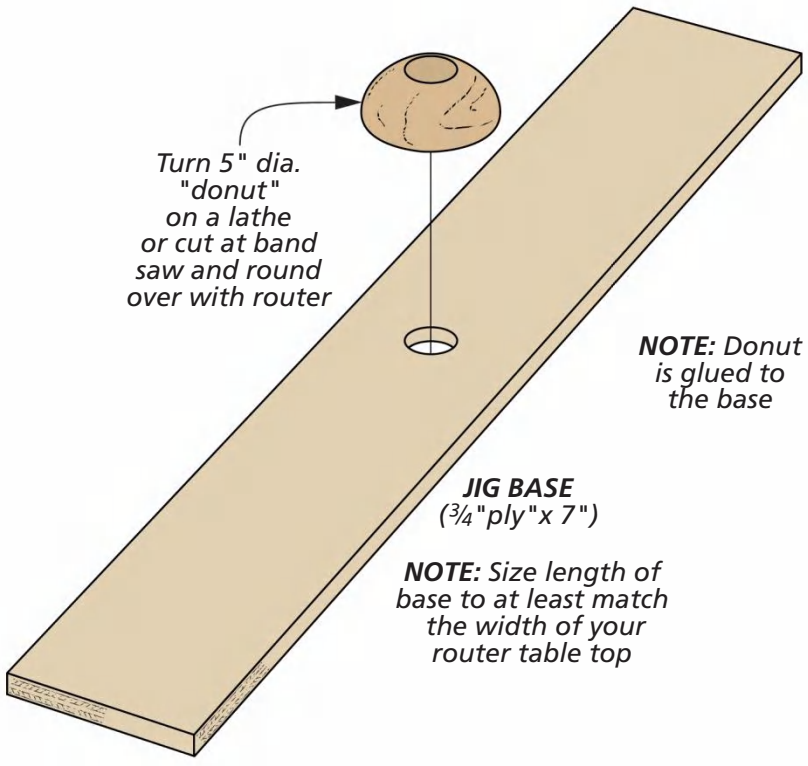

▲ Align the donut and baseplate over the router bit. Clamp it in place. If the donut hole is slightly small, you can often raise the spinning bit through the donut to create a zero-clearance opening.

## DONUT JIG

Sometimes, the curvature of a project part means you can't rout it at the router table. To make these cuts, you need a table that has as little length as possible — even smaller than the baseplate on the router. This is where I like to use a "donut" jig. The donut creates a platform that supports the workpiece as it enters and exits the bit, and nowhere else. This technique is commonly used to add a roundover to curved legs, like you see below.

**DESIGNING THE JIG.** The donut is fairly simple to make but its dimensions will vary depending on the bit and the workpiece. It can be a bit of trial and error to make the perfect one, but the donuts that don't work for the current operation may work perfectly for a future project.

There are four variables to consider when making the donut. First is the thickness or height of the donut; the tighter the radius of a part, the taller the jig needs to be. Next is the hole diameter; this needs to be sized correctly for the router bit to pass though. The roundover sizes; how much curvature is needed on the outside of the jig. Lastly, the overall diameter; this needs to be sized appropriately so that you can get your part fully on the jig to rout it.

**BUILDING THE JIG.** Using a circle cutting jig at the band saw, cut the outer diameter of the donut. This jig will leave a marking of the center point which you'll use later. Add a roundover with the desired radius along the top edge. This side will become the top. Lastly using the centerpoint as reference, drill a hole through the part to create the desired inner diameter. That leaves us with a donut-shaped ring. Or maybe it's closer to a half bagel?

**PUT IT TO USE.** With the donut made, glue it to a baseplate and clamp it over the bit, like you see in the photo above. A collet extension may need to be used to raise the bit high enough. Align the donut so it's not in contact with the bit. Workpieces can now be run through the bit with the donut supporting and raising it off the table to account for the curvature in the workpiece. These simple jigs open a world of possibilities to the already versatile router. W

▲ Different curvature donuts allow you to get into tighter areas. Start with the workpiece resting on the donut and roll it into the bit, making sure to rout against the rotation of the bit to avoid backrouting and chip out.

SHAPER

# ORIGIN + WORKSTATION

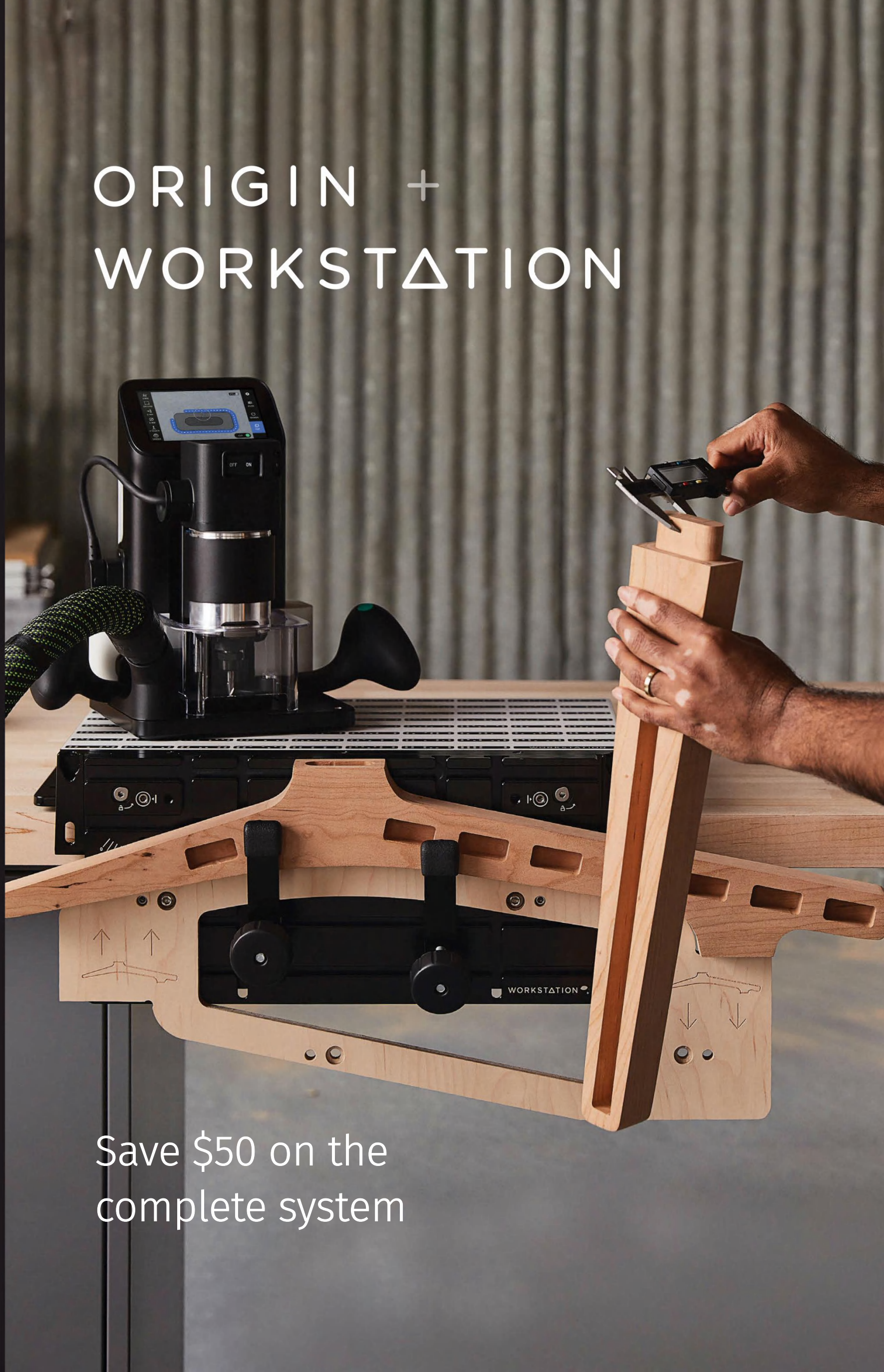


Save $50 on the complete system

shapertools.com

# Sharpening Turning Tools

Sharpening wood cutting tools is a subject that has been discussed many times in the past. And, I am sure, it will be discussed many times again in the future. Sharpening and "what is sharp?" is all relative to what you are cutting.

Depending on the tool to be sharpened, and the method used, of which there are many, we are all looking for the same thing. A sharp edge to cut the wood efficiently.

Woodturning has changed tremendously over the last 36 years that I have been teaching and demonstrating all over the world. The type of turning, the woods we have access to, as well as the tools and techniques have all evolved.



Written by: Jimmy Clewes

## TURNING THROUGH THE AGES

Years ago, woodturning tools were made of carbon steel and one could achieve a really sharp edge, but it would not last for repetitive production work like stair spindles. The tools mainly used were a skew, spindle roughing gouge, a parting tool, and a few sizes of spindle gouges. Bowl gouges are relatively new, as bowls and plates were formed using a scraper and were superseded by the more economic ceramic tableware.

Over the years, tool design and different steel alloys have evolved. After carbon steel, HSS (High Speed Steel) was introduced, one could get a sharp edge that would last longer than carbon but not get quite as sharp. Now there are several different steels available from various manufactures, some of them sharpen easier using different products available.

**SHARPENING AS A SKILL.** Sharpening is a skill in itself and has to be learned. Many years ago, before the introduction of sharpening jigs for woodturning tools, they were sharpened on a grinder and honed by hand using a sharpening stone to keep the edge keen.

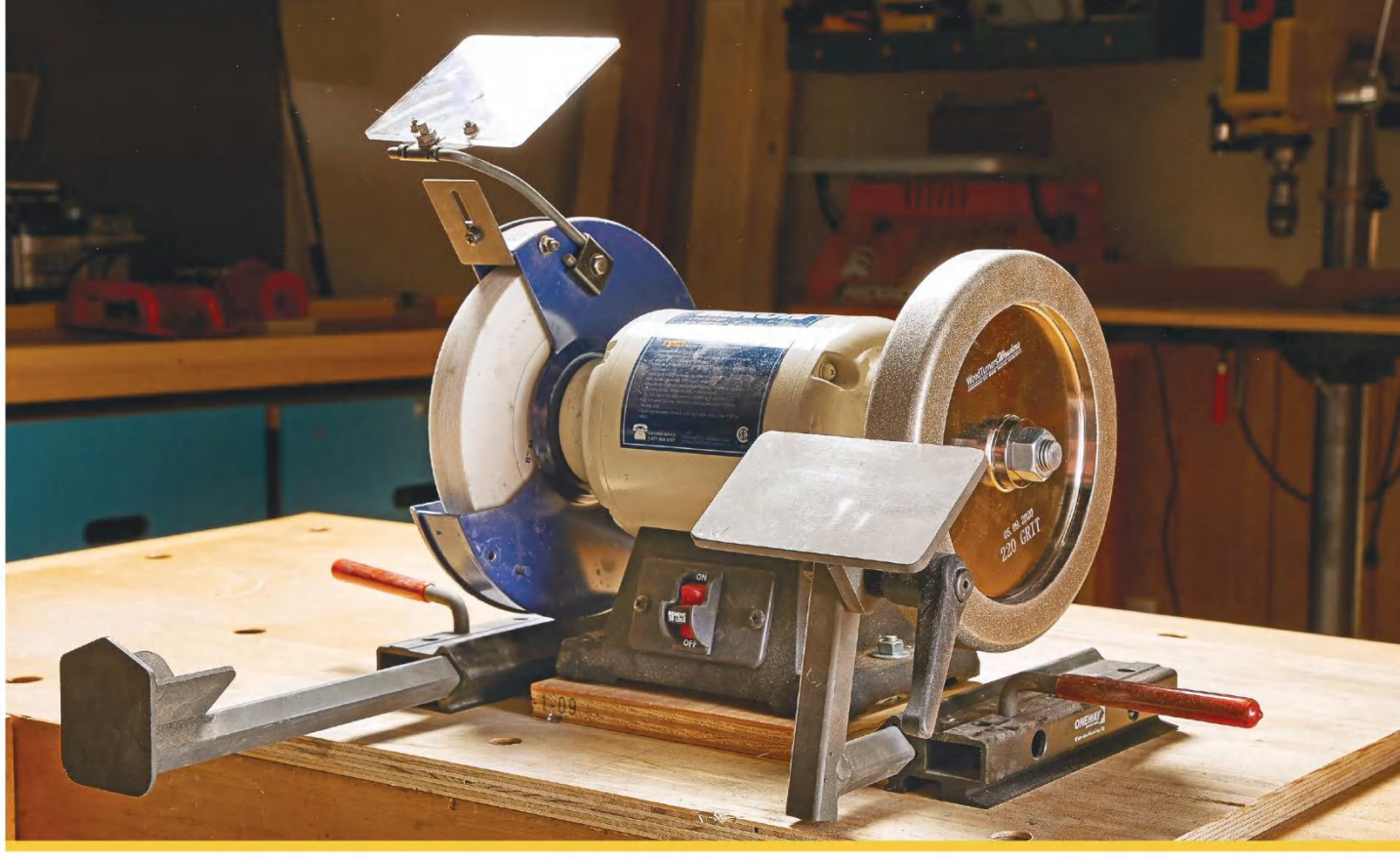

A basic turning sharpening setup is shown here. The *Oneway Wolverine system* includes a V-cradle and a platform. Both of which slide into receivers mounted below the wheel to adjust for different tools and bevel angles.

With some of the grinds that are popular now, "long grind bowl gouge" for example, have swept back wings that can be used in a draw cut fashion as well as a traditional push cut. This new grind in particular can be very difficult to grind freehand and that's when a jig is a great help.

**WOLVERINE JIG.** There are many jigs systems available but the one I use is the *Oneway Wolverine system* with the standard *Vari-Grind* jig. The advantage of this jig is that it is generally quicker and easier than freehand grinding. It also gives you repeatability, as you will get the exact same grind every time, and this saves steel!

**GRINDERS.** Most of the grinders in the UK, my birthplace, use 6"-dia. wheels and work perfectly fine with the *Oneway* jig system. But, I prefer the 8"-dia. wheels here in the US as the bevel is slightly less concave (therefore stronger) from the wheel.

While most woodturners use a dry grinder for sharpening their tools, some have 'wet' grinders such as the *Tormek*. They work well, but I am more of a traditionalist and prefer *Norton* aluminium oxide wheels. For more on grinding wheels, see the box on page 18.

Adjust the V-cradle out until the angle of the tool bevel matches the profile of the wheel. Then, lock it in place and turn the grinder on. Rest the butt of the tool in the cradle and rotate the cutting edge on the wheel to sharpen it.

## SPINDLE ROUGHING GOUGE

The spindle roughing gouge (SRG) is designed to turn a square blank round, between centers. To sharpen them, two ways are pictured. To the left, you can see the first method using the long arm support. The handle sits in the cradle and the tool is rotated left and right to sharpen the bevel.

Adjust the V-cradle until the bevel on the spindle roughing gouge matches the curvature of the grinding wheel.

An SRG can also be sharpened with the adjustable tool rest and is the safest way to sharpen an SRG with a CBN wheel.

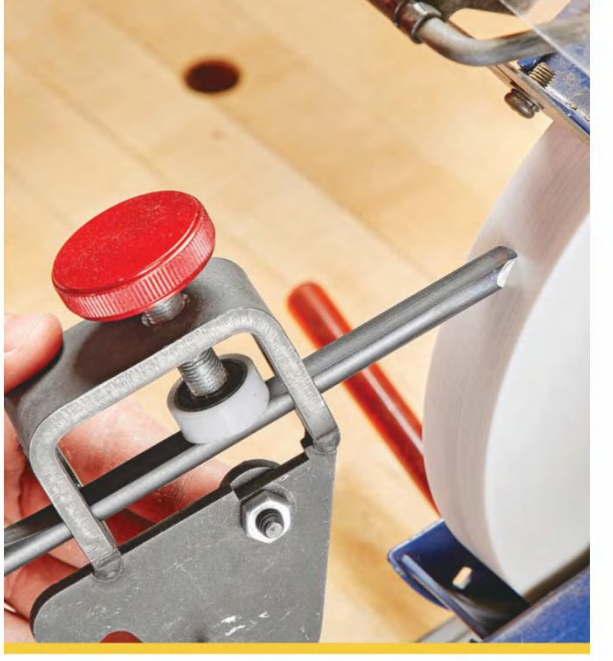

The spindle gouge can easily be sharpened using the *Vari-Grind* jig. The tool is rocked back and forth to sharpen the entire bevel.

The second way to sharpen an SRG is to use the adjustable platform, as you see in the center photo above. Note that when using a diamond wheel or a CBN (Cubic Boron Nitride) wheel, this is the only safe way to sharpen a SRG. Using the V-cradle with a CBN wheel can cause the tool to pinch and damage the wheel.

I sharpen the SRG at approximately 45°. A few degrees here or there either way makes very little difference, so don't be too concerned if you are slightly off on any of these tools. It's more important that the tool is sharp and gives you the results that you're looking for.

### THE SPINDLE GOUGE (40-45°)

For a spindle gouge, I prefer to use the *Vari-Grind* jig and sweep the wings back. You simply set the protrusion of the tool and angle of the jig, and set it in the V-cradle. Then, the tool can be rocked left and right to sharpen the end and wings. You can see this in the right photo above. For detail work and to reach into tight areas, I may lower the angle from 40-45° to 35°.

### THE SKEW CHISEL (25-35°)

To sharpen a skew chisel, I rough shape the bevel on a belt sander by raising and lowering the handle. Then, I hone the edge using either a waterstone or a diamond sharpener. Note the profile of my skew at the cutting edge — the once flat bevel is now rounded. I do this so that the tool wants to come out of the cut. This modified profile reduces the risk of "catching" the tool.

I find this profile much easier to hone and keep sharp and rarely needs reshaping. It should be razor sharp for the best results. Traditional flat bevels can be sharpened with a guide like on a bench stone.

### THE PARTING TOOL (25-30°)

Possibly the easiest tool to sharpen apart from the scraper is the parting tool. Just make sure

The first thing I do on a skew chisel is to round over the bevel shoulders. Use a belt sander. Start with the bevel "line" on the belt and raise and lower the tool handle to round over the bevel face.

For final sharpening after shaping the skew, I go to an oilstone. Then, it's just a simple matter of putting an edge on like you would a normal bench chisel.

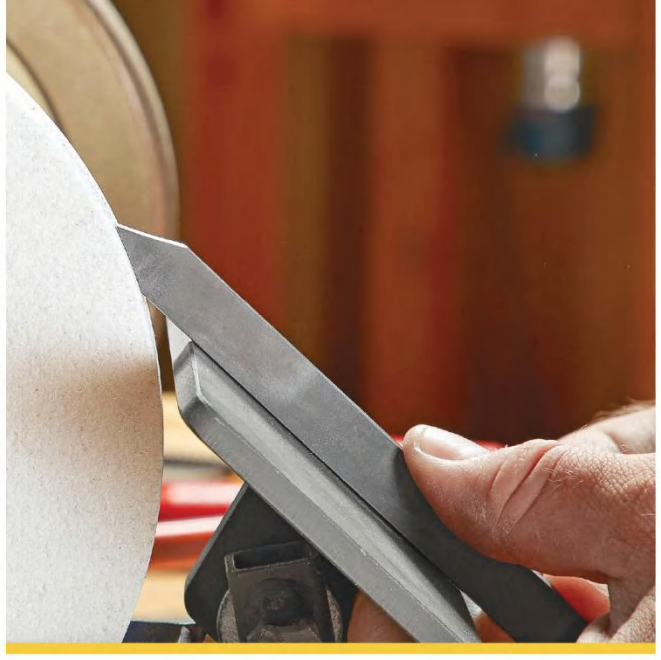

Match the angle of the tool rest so the parting tool is resting on the wheel. Then, sharpen both sides of the parting tool keeping the end square.

Traditional scrapers are easiest to sharpen upside-down. The tool rest is angled down to drag a burr off the top (cutting) side.

Negative rake scrapers are sharpened long bevel (bottom) first, then the shorter second bevel for a 70° edge.

you evenly grind either side and that the end of the tool is square. An angled tip can affect the cut quality. You can grind this using the V-cradle, or on the platform, like you see above.

### THE SCRAPER (70-80°)

For traditional scrapers, I prefer to sharpen the tool upside down and therefore drag a burr off of the top side. The tool rest plate is tilted slightly down into the wheel and gravity helps hold the tool down and produce a larger friable burr. You can see this in the middle photo above.

The negative rake scraper is also popular and has two bevel angles. The sum of the angles equals about 70°. This is achieved by first grinding the initial bevel angle and then grinding the top of the tool upside down to produce the negative rake (right photo, above).

### THE BOWL GOUGE (40-50°)

Possibly the hardest tool for beginners to sharpen is the bowl gouge. As with the spindle gouge, I use the *Vari-Grind* jig with the arm to sweep the wings back on my gouges. To set a consistent angle, I set the bowl gouge in my *Vari-Grind* jig and set the protrusion using the V-cradle. I line up the bevel with the end of the cradle (left photo below). For most of my bowl gouges, I center the wing-nut on the jig on the second notch.

For the standard and bottom feeding gouge, I grind freehand. However, you can also use the tool rest to sharpen these. You cannot use the *Vari-grind* jig because the bevel angle is often too obtuse to safely use a sharpening jig. It can cause a pinching or grabbing action.

In my opinion, at the end of the day, it does not matter how you sharpen your tools as long as you get the end result you want. And that result is to work the wood as safely and efficiently as possible. Because all woodworkers know how important a sharp tool is. W

GO 2 Online Extras

For a video on sharpening turning tools, go to: Woodsmith.com/251

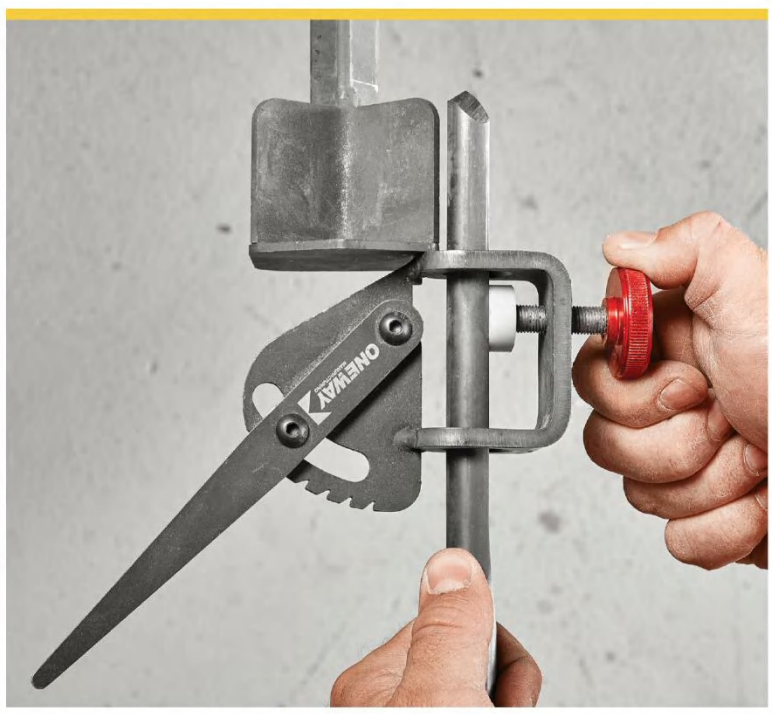

Setting the protrusion is what will give consistent results with the *Vari-Grind* jig. I use the V-cradle as a gauge to get the same setup every time.

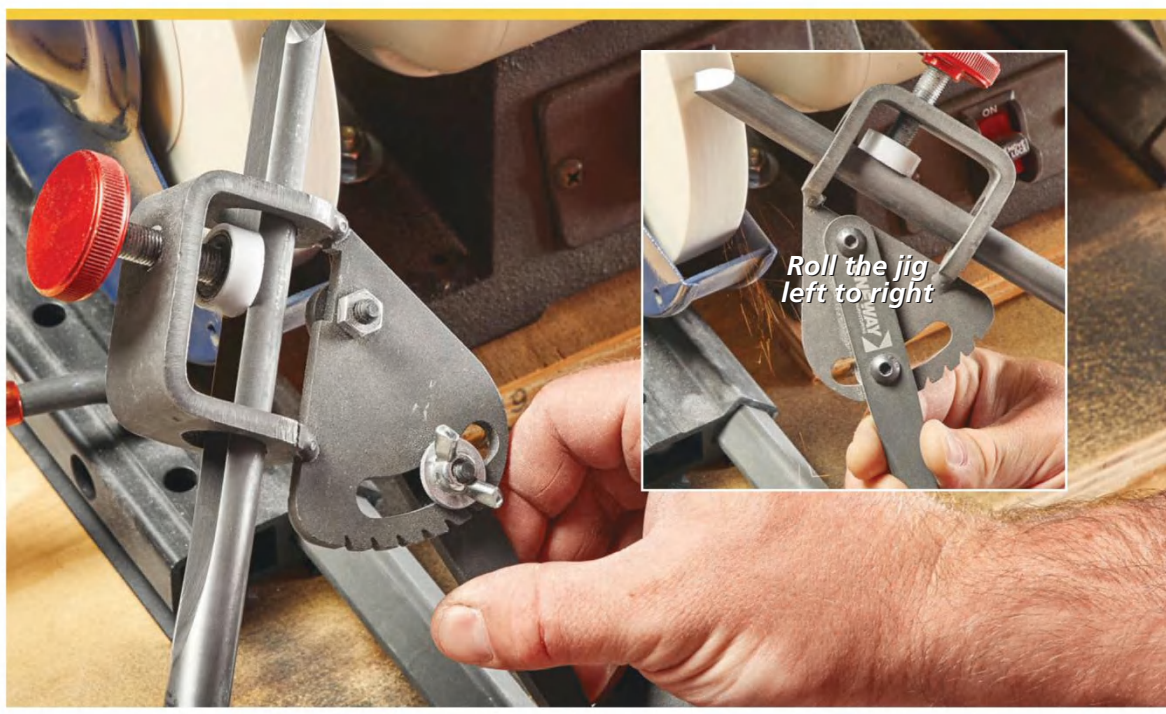


Sharpening a bowl gouge starts with one wing. Then, in a smooth, fluid motion roll the tool from left to right sharpening the entire edge. You'll know the edge is sharp when the sparks travel down the flute as you sharpen.

## GRINDING WHEELS GALORE

In my shop, I have a 60-grit general purpose wheel for reshaping and a white, 150-grit aluminum oxide wheel for sharpening. The white (or pink) wheels tend to be more friable, meaning particles break off from the wheel more readily and therefore the wheel stays cleaner longer with less "glazing."

Inevitably, someone will ask about CBN (Cubic Boron Nitride) wheels. They are very popular now, the main advantage of these is that they stay flat and do not need dressing. There is far less spark created, as well. Available in a variety of grits, the finer grits don't remove steel too quickly and leave a polished surface. However they do eventually wear out and can be an expensive accessory. As a note, you should not use the V-cradle to sharpen a spindle roughing gouge on the CBN wheel — they can pinch and damage the tool or the wheel.

CBN wheels are available in grits ranging from 80-grit to 600-grit. Unlike traditional wheels, some CBN wheels have rounded corners to use as a radius while sharpening, as well as a small flat section on the side of the wheel.

# HARBOR FREIGHT
QUALITY TOOLS AT RIDICULOUSLY LOW PRICES

Shop When You Need To Online & In-Store

## NO COUPON REQUIRED
**3-Ply Disposable Face Masks**
10 Masks per Pack
NEW
Less Than 50¢ Per Mask
$4.99
- Breathable
- Comfortable, Lightweight
- Single Use
- Non-Medical

In-Store Only
While Supplies Last
ITEM 57593

## SUPER COUPON
U.S. GENERAL — BIGGER · STRONGER · MORE STABLE SERIES 2
**30", 4 Drawer Tech Cart** (1172)
YOUR CHOICE OF 6 COLORS
$149.99
~~$199.99~~
Save $730
Side tray sold separately.
Compare to Snap-on Blue-Point KRBC10TBPC $880
ITEM 56387, 56393, 64096, 56392, 56386, 56394
Use Online & In-Store
20584283 LIMIT 1 - Exp. 10/23/20*

## WOW SUPER COUPON — SAVE 85%
(4450) **1" x 25 ft. Tape Measure**
PITTSBURGH — LIFETIME WARRANTY
LIMIT 3
WOW! 98¢
~~$3.99~~
ITEM 69030/47737
69031 shown
Compare to Komelon L4825HV $6.98
Use Online & In-Store
20585172 Exp. 10/23/20*

## SUPER COUPON
**20% OFF** ANY SINGLE ITEM*
Use Online & In-Store
20569945
Limit 1 coupon per customer per day. Save 20% on any 1 item purchased. *Cannot be used with other discount, coupon or any of the following items or brands: Inside Track Club membership, Extended Service Plan, gift card, open box item, 3 day Parking Lot Sale item, compressors, floor jacks, power stations, safes, storage cabinets, chests or carts, trailers, welders, Admiral, Ames, Atlas, Bauer, Central Machinery, Cobra, CoverPro, Daytona, Diamondback, Earthquake, Fischer, Hercules, Icon, Jupiter, Lynxx, Poulan, Predator, Tailgator, Viking, Vulcan, Zurich. Not valid on prior purchases. Non-transferable. Original coupon must be presented. Valid through 10/23/20.

## SUPER COUPON
McGRAW (635)
**20 Gallon, 135 PSI Oil-Lube Air Compressor**
$164.99
~~$189.99~~
Save $85
Compare to Porter-Cable 118903799 $249.99
ITEM 56241/64857 shown
Use Online & In-Store
20590922 LIMIT 1 - Exp. 10/23/20*

## SUPER COUPON
HaulMaster (5841)
**72" x 80" Moving Blanket**
$5.99
~~$8.99~~
Save 70%
Compare to Blue Hawk 77280 $19.99
ITEM 69505/62418
66537 shown
Use Online & In-Store
20592268 LIMIT 4 - Exp. 10/23/20*

## SUPER COUPON
ADMIRAL (981)
**12" Dual-Bevel Sliding Compound Miter Saw with LED and Laser Guide**
$179
~~$199.99~~
Save $90
ITEM 64686
Compare to Ryobi TSS120L $269
Use Online & In-Store
20597829 LIMIT 1 - Exp. 10/23/20*

## SUPER COUPON
WARRIOR (4901)
**29 Piece Titanium Drill Bit Set**
$10.99
~~$18.99~~
Save 83%
Compare to Dewalt DW1369 $68.14
ITEM 5889/62281
61637 shown
Use Online & In-Store
20602013 LIMIT 3 - Exp. 10/23/20*

## SUPER COUPON
HaulMaster (4828)
**18" Working Platform Step Stool**
$19.99
~~$29.99~~
Save 50%
Compare to Neocraft 60635 $39.99
ITEM 62515/66911 shown
Use Online & In-Store
20602105 LIMIT 4 - Exp. 10/23/20*

## SUPER COUPON
BRAUN (8013)
**5000 Lumen 4 ft. LED Hanging Shop Light**
~~$29.99~~ $19.99
Save 33%
ITEM 64410
Use Online & In-Store
20605673 LIMIT 3 - Exp. 10/23/20*

## SUPER COUPON
HaulMaster (6240)
**18" x 12", 1000 lb. Capacity Hardwood Mover's Dolly**
$7.99
~~$10.99~~
Save 65%
Compare to Buffalo Tools HDFDOLLY $22.99
ITEM 60497/63095
63096/63097/63098 shown
Use Online & In-Store
20607685 LIMIT 4 - Exp. 10/23/20*

## SUPER COUPON
PORTLAND (6864)
**7 AMP Electric Pole Saw 9.5" Bar**
6 FT. to 8 FT. 10"
$59.99
~~$79.99~~
Save $39
Compare to Worx WG309 $99.98
ITEM 56808/63190
62896 shown
Use Online & In-Store
20608063 LIMIT 2 - Exp. 10/23/20*

## SUPER COUPON
VOYAGER (2630)
**15" Tool Bag with 14 Pockets**
$6.99
~~$9.99~~
Save 46%
Tools sold separately.
Compare to Husky 823035N12 $12.97
ITEM 62348/62341
61469 shown
Use Online & In-Store
20609308 LIMIT 4 - Exp. 10/23/20*

## SUPER COUPON
CENTRAL MACHINERY
**8", 5 Speed Benchtop Drill Press** (2307)
$54.99
~~$69.99~~
Save 31%
Compare to WEN 4208 $79.97
ITEM 62520/60238 shown
Use Online & In-Store
20616795 LIMIT 1 - Exp. 10/23/20*

## SUPER COUPON
HaulMaster (5148)
**4 Piece, 1" x 15 ft. Ratcheting Tie Downs**
$6.99
~~$12.39~~
Save 69%
ITEM 63056/63057/63150/56668/63094 shown
Compare to Keeper 5505 $22.80
Use Online & In-Store
20624434 LIMIT 4 - Exp. 10/23/20*

## SUPER COUPON
CHICAGO ELECTRIC POWER TOOLS (4750)
**6 AMP Variable Speed Reciprocating Saw**
Blade sold separately.
$19.99
~~$27.99~~
Save 66%
Compare to Porter-Cable PCE360 $59.98
ITEM 61884/62370 shown
Use Online & In-Store
20629447 LIMIT 4 - Exp. 10/23/20*

## SUPER COUPON
PITTSBURGH AUTOMOTIVE #1 SELLING JACKS IN AMERICA (1521)
**Rapid Pump® 1.5 Ton Lightweight Aluminum Floor Jack**
AMERICAN SOCIETY OF MECHANICAL ENGINEERS ASME PASE COMPLIANT
$59.99
~~$79.99~~
Save $91
Compare to K Tool KTI63094 $151.42
ITEM 64552/64832
64980/64545 shown
Use Online & In-Store
20654188 LIMIT 2 - Exp. 10/23/20*

## SUPER COUPON
HARDY™
**Mechanics Gloves** (315)
AVAIL. IN SM, MED, LG, XL, XXL
$4.99
~~$5.49~~
Save 66%
Compare to Valeo 25521 $14.99
ITEM 62434, 62426, 62433, 62432, 62429, 64179, 62428, 64178 shown
Use Online & In-Store
20669342 LIMIT 4 - Exp. 10/23/20*

## SUPER COUPON
**200 Lumen LED Super Bright Flip Light** (5841)
$1.99
~~$3.99~~
Save 60%
Compare to Premier SW-SWITCH-12/24 $4.99
ITEM 64723/64189
63922 shown
Use Online & In-Store
20656200 LIMIT 4 - Exp. 10/23/20*

## SUPER COUPON
PREDATOR (1394)
**2000w Super Quiet Inverter Generator**
$449.99
~~$499.99~~
Save $559
Compare to Honda EU2000i $1,009
ITEM 62523
Use Online & In-Store
20660348 LIMIT 1 - Exp. 10/23/20*

**1,000+ Stores Nationwide • HarborFreight.com**

*Original coupon only. No use on prior purchases after 30 days from original purchase or without original receipt. Valid through 10/23/20.

Pricing, promotions, and availability may vary by location and at www.harborfreight.com and are subject to change without notice. We reserve the right to limit quantities. "Compare to" advertised price means that the specified comparison, which is an item with the same or similar function, was advertised for sale at or above the "Compare to" price by another national retailer in the U.S. within the past 90 days. Prices advertised by others may vary by location. No other meaning of "Compare to" should be implied. Although we make every effort to assure that our prices and products are advertised as accurately as possible, we are only human and in the event an error is made, we reserve the right to correct it.

WEEKEND Project

# Band Saw Boxes

▲ Colorful flocking adds a luxurious look and feel to the inside of the boxes. It has the added benefit of creating a soft interior for all of your precious items.

A sharp, narrow blade, some nice stock, and a little bit of out-of-the-box thinking can yield some amazing boxes that are made with only the band saw.

Band saw boxes have always captivated me. The first time I saw someone do a band saw box, I was amazed how you could create a variety of containers with just one tool. And to me, that was just plain cool. When it comes to band saw boxes, your imagination is about the only limiting factor.

**A SET OF THREE.** The boxes you see above were designed by our creative director, Chris Fitch. They are a great introduction to three box styles — a lidded box, a small hinged box, and a chest of drawers. They're all built almost entirely with a band saw, so throw on a sharp blade and let's get started.



Written by: Logan Wittmer; Project Design: Chris Fitch

## LIDDED BOX

The lidded box is the first of the three boxes. Its leaf shape is cut from one solid piece of wood. It's not large, so don't be afraid to use a special piece of stock — you don't need a lot of it. Here, we used curly maple.

**PROFILE.** The first thing to do is use the pattern you'll find at *Woodsmith.com/251* and cut the outside shape. I found a 3/16" 20TPI blade was ideal for all these boxes. Make sure to tilt the table to create the beveled sides.

Next, reset the table to 90° and use the fence to cut the top off of the blank. Set this aside for now.

**INTERIOR PLUG.** The main work on this box is done on the inside. Tilting the band saw table again, cut out the waste plug from the inside (Figure 1 and '1a'). From this plug, you'll cut the lip for the lid and also the bottom.

**CLOSE THE KERF.** Before tackling the bottom, you have to glue the kerf closed on the box. This will make the inside slightly smaller than the plug you cut out. Now, insert the plug into the box and mark where it protrudes through the bottom. Then, use that line to determine and mark the bottom thickness. Returning the table to 90°, cut off the bottom and lip by guiding the plug along the fence (Figure 2). You can then glue the bottom in place and sand away any bits that are protruding out of the bottom. To glue on the lip, place the lid upside down on your bench. Apply a few dabs of glue and place the lip on the top. Then, place the box over the lip and slide it around so that the lip is in the correct position. Carefully lift away the box.

**THE HANDLE.** Cutting the handle is the final piece of this box. Use the pattern and cut it to shape before sanding it smooth. Then, glue it in place. After it's dry, you can sand the box, add a finish, and flock the inside and lip.

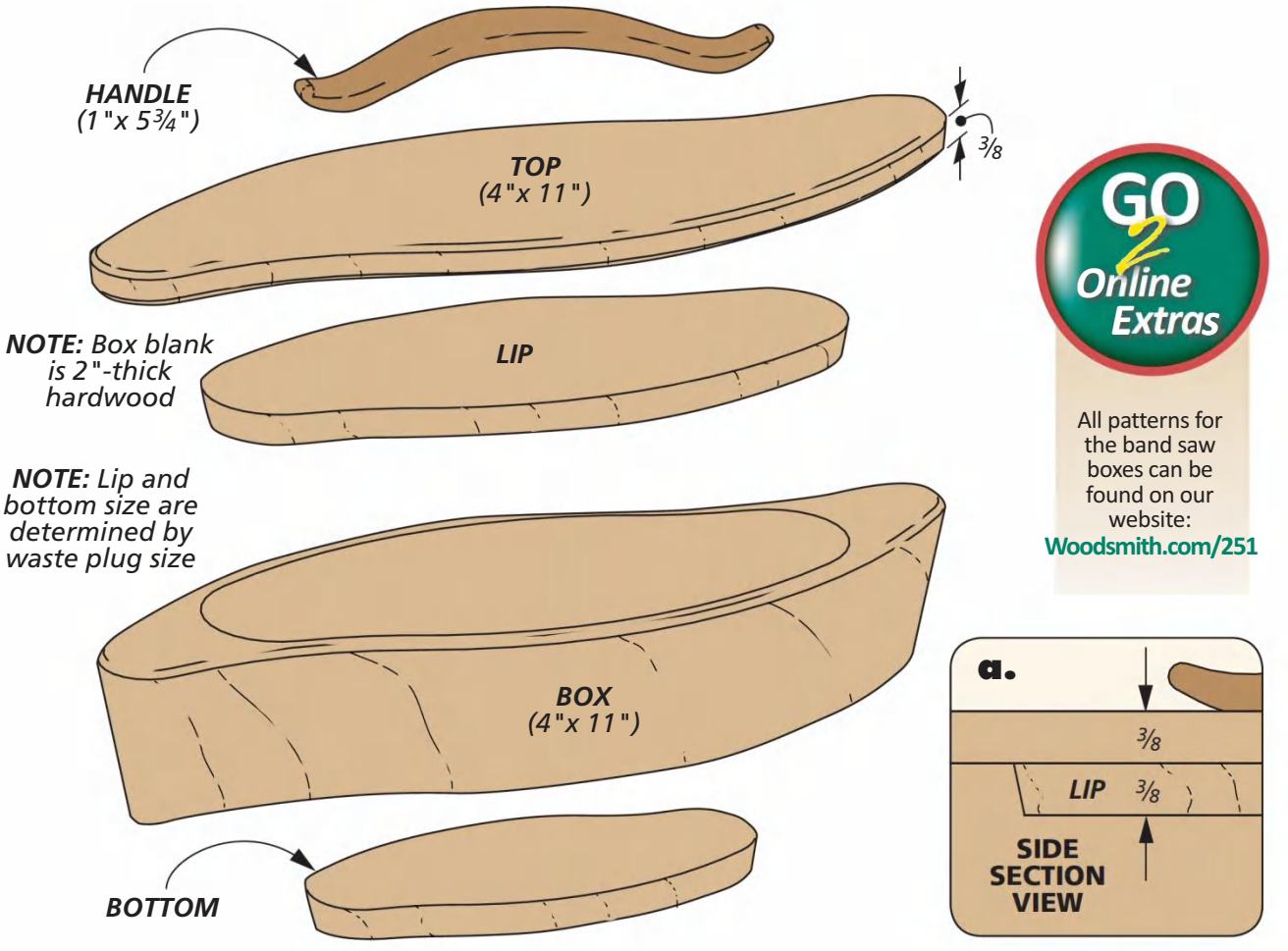


GO Online Extras

All patterns for the band saw boxes can be found on our website: Woodsmith.com/251

## WASTE PLUG

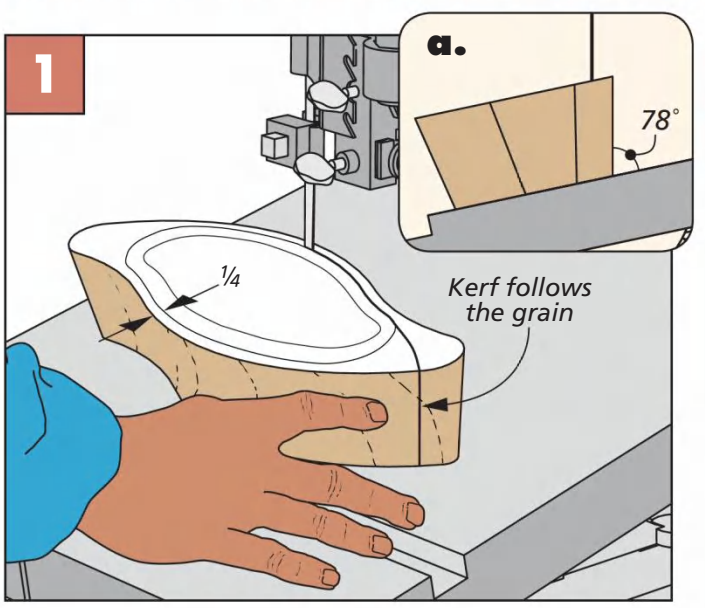


**Strategic Cut.** Align the initial cut for the interior plug so that it follows the grain of the box. This makes it less noticeable when it's glued closed.

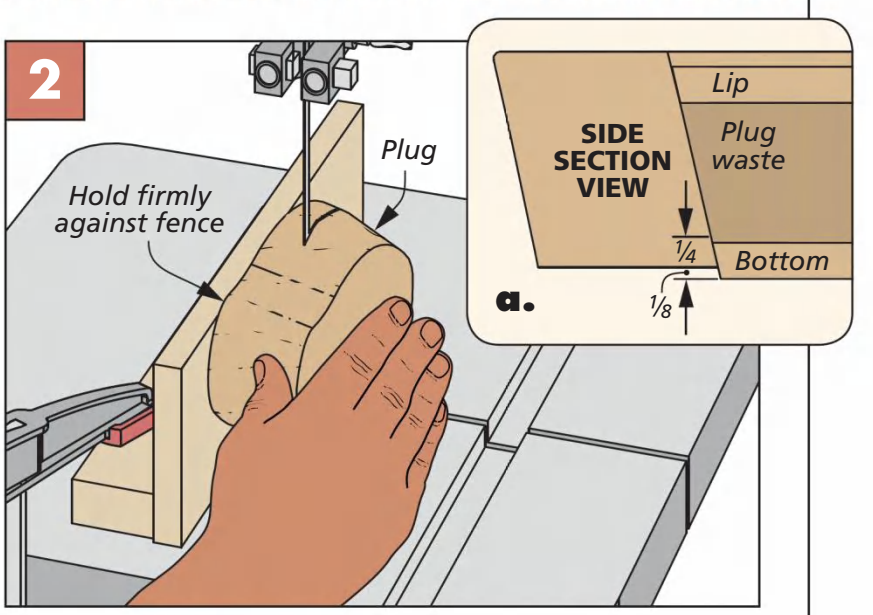


**Bottom & Lip.** Set the fence to cut the appropriate thickness bottom and lip from the plug. Push it firmly against the fence to keep it from rocking.

Illustrator: Becky Kralicek

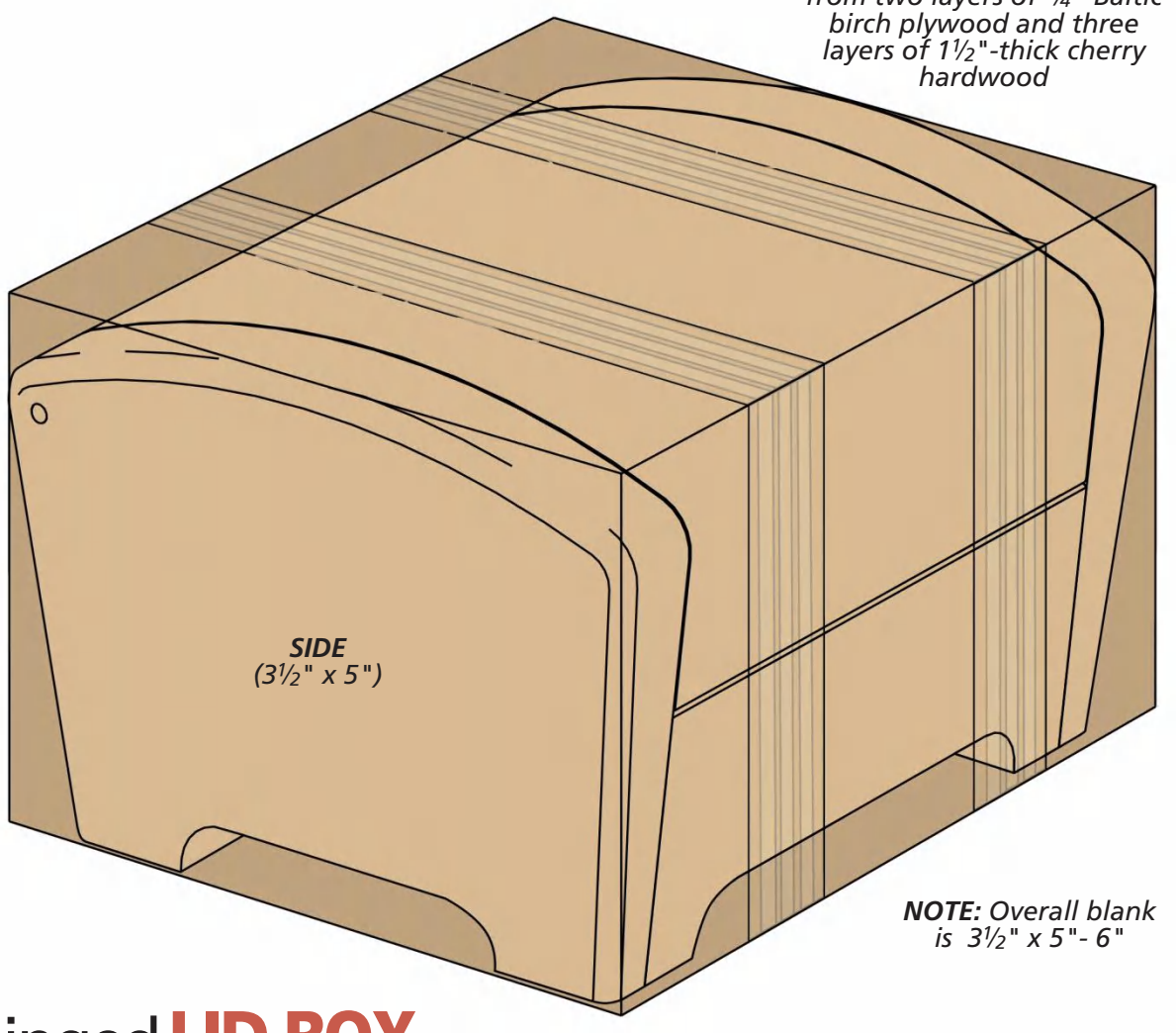


# Hinged LID BOX

This hinged lid box is made from a stack of blanks glued together. We made ours from two layers of Baltic birch plywood sandwiched between three layers of cherry. Once the blank has been glued up, this band saw box starts at the drill press.

**PIVOT PINS.** As you can deduce from the name, this box has a hinged lid. To create hinge pin location, you need to drill a hole for a brass pin to be installed later. As you can see in Figure 1, that is done by standing the blank on end and drilling the designated spots on the pattern. You'll want to go deep enough so that the pin can create a solid connection when the box is assembled.

**OUTSIDE SHAPE.** After the pin holes are drilled, you can head over to the band saw and cut the outside to shape. Start by removing the waste between the feet first, while the blank is still square. Then, you can focus on the outside shape. As with drilling, cut the box with the blank standing on end. Follow the outside of the pattern and refine the shape later with sandpaper, files, and rasps.

**CUT OFF THE ENDS.** With the shape how you want it, you can cut the two ends off of the box. You'll notice that these ends have the same angle that the front and back of the box have. Don't worry about that for now. You'll want to leave them square so it's easier to clamp the box back together in a little bit. For now, just use the fence and take a slice off each end and set them aside.

**BOTTOM & LID.** To create the bottom and the lid, you'll need to apply another pattern onto the center section that you just cut the ends off of. Then, you'll make a couple of cuts. The first, is to create the barrel of the hinge. This cut is from the backside of the box and creates the round barrel. Then, from the front of the box, you can make the rest of the cuts, cutting the lid free and forming the bottom. You can see these in Figure 1 on the next page.

When the waste is removed, take a couple of minutes to smooth out the inside of the

## PIVOT PINS

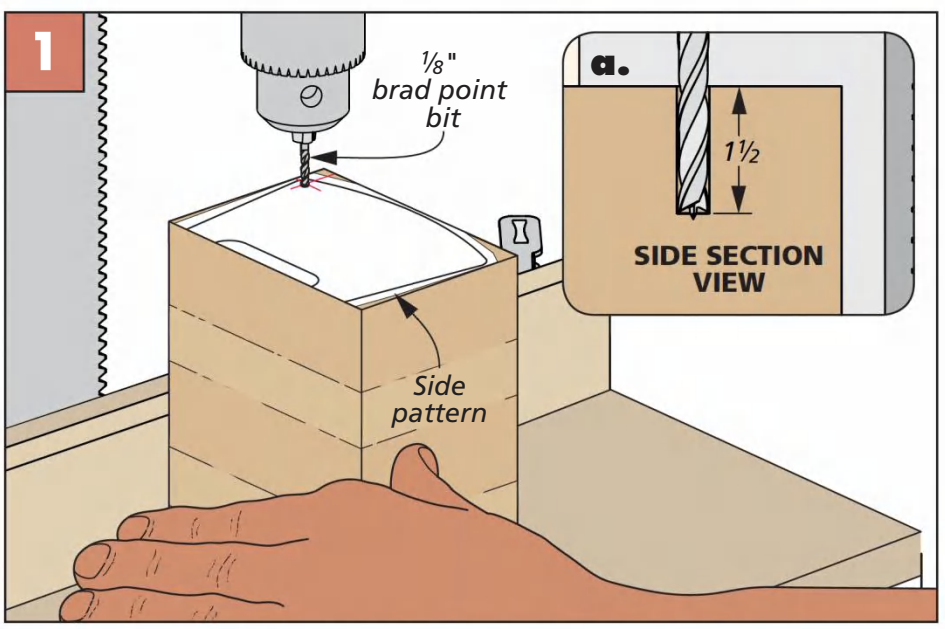


**Hinge Pin Holes.** Use a brad point bit to drill the pin holes on the ends of the box. Set the fence to position the bit and drill the first side. Flip the box blank over and drill the opposite side.

bottom with sandpaper and files. Then, you can glue the sides back to the bottom of the box. Just make sure you don't glue the lid of the box to the sides — you'll install it later.

**ANGLED SIDES.** Now's the time to cut the bevels on the sides of the box. You could plane these, but this is a band saw box after all, right? To cut these accurately, I feel like the best option is to add an auxiliary fence to the table. You can see this setup in Figure 2 below.

Start by setting the angle of the table to match the front and the back of the box. Then, use a pair of clamps to secure a tall fence on the right hand side of the blade. The fence must be tall enough to reach the lid of the box or you'll have to reposition it between cuts. Then, you can make a cut along both ends of the box.

**BRASS PINS.** The final assembly on the hinged lid box is to attach the lid lid. Check the fit between the lid and the sides, and make sure it's loose enough to open smoothly. If it's tight, sand the ends and barrel down a little bit. Then, cut a length of brass pin as a pivot point. The pins can be epoxied into place. When you're doing this, add epoxy into the holes in the lid and insert the pin through the side into the lid — make sure to not epoxy the pin in the sides. After the epoxy has cured, sand the pins flush.

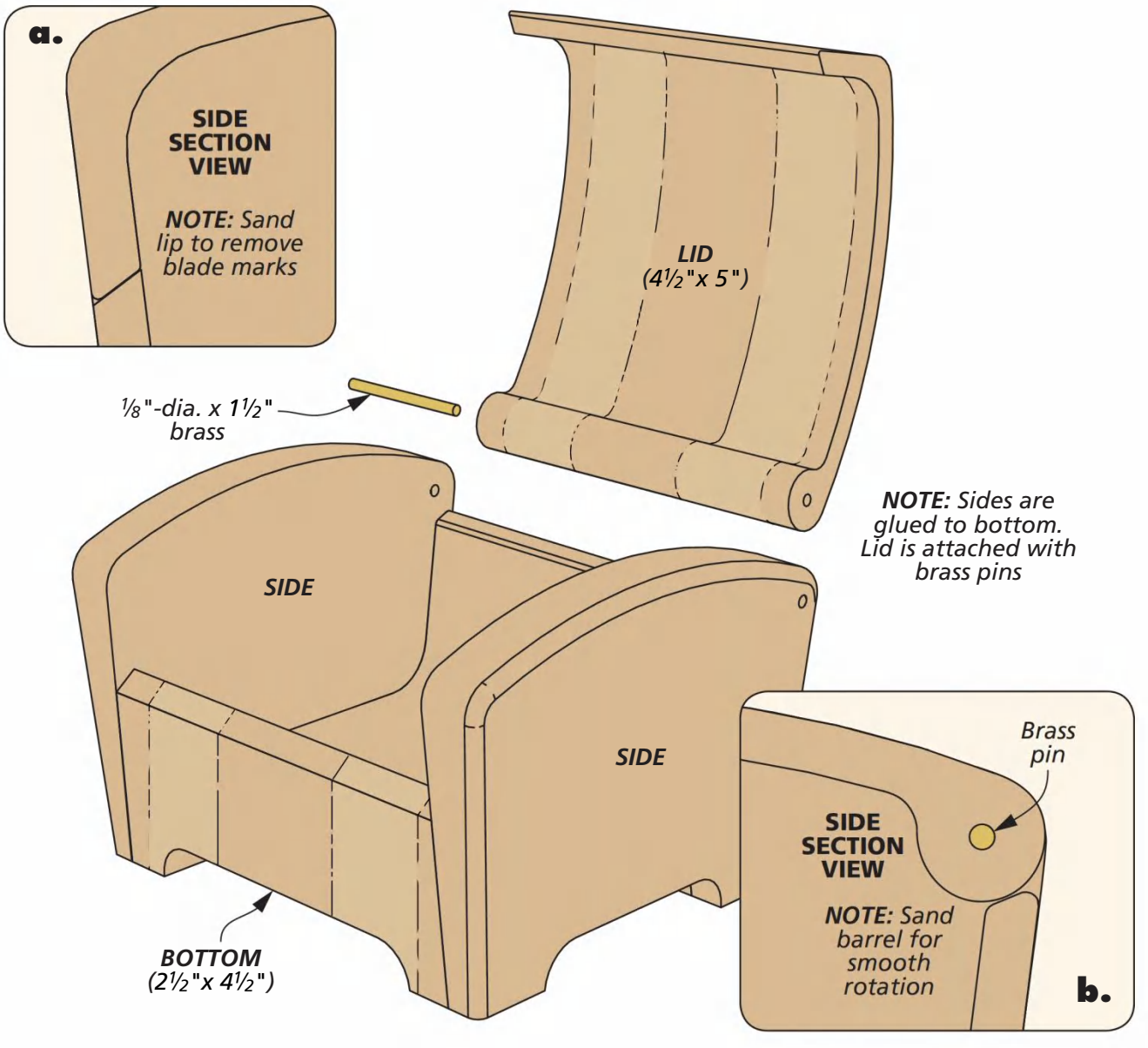


## SHAPING THE BOX

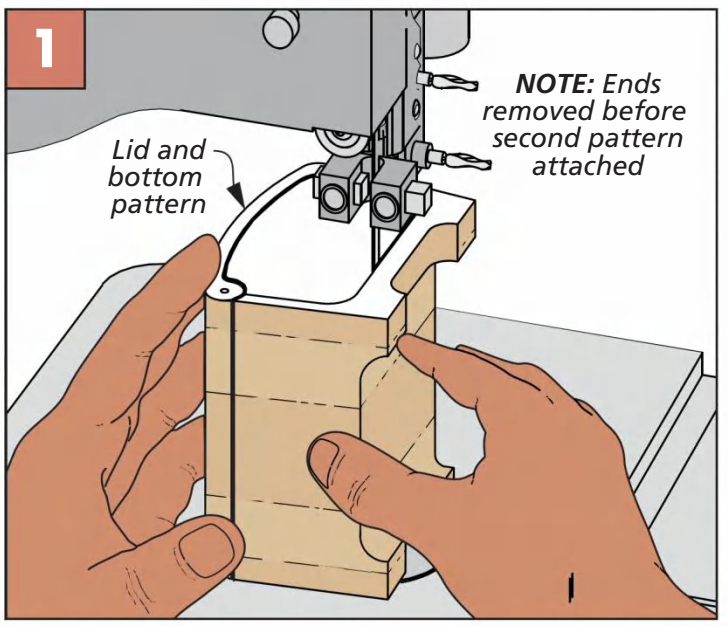


**Waste.** After removing the ends, apply a new pattern and cut the center into three parts — a bottom, lid and a waste section.

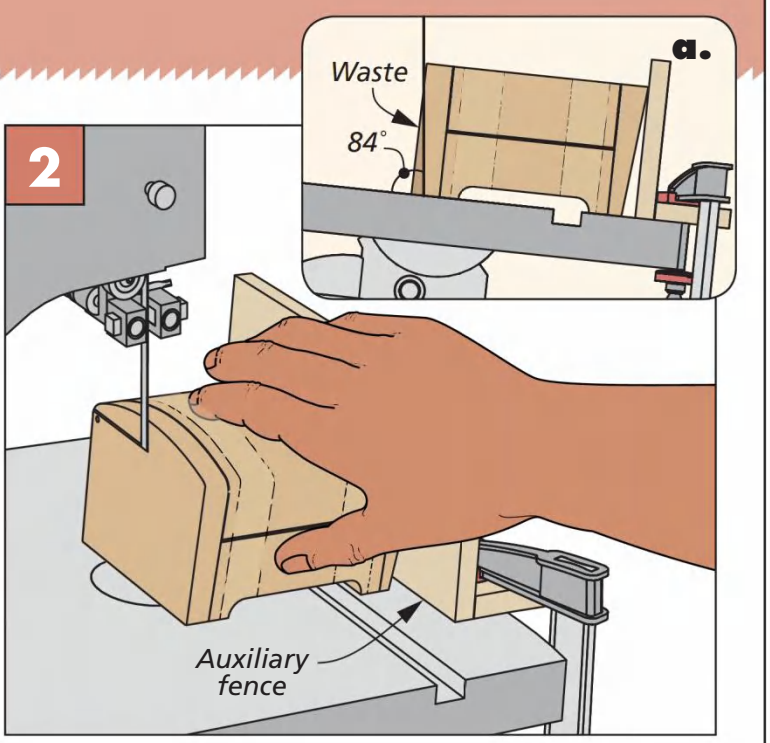


**Beveled Ends.** Tilt the band saw table and position an auxiliary fence. Clamp the fence down and make the cut on each end.

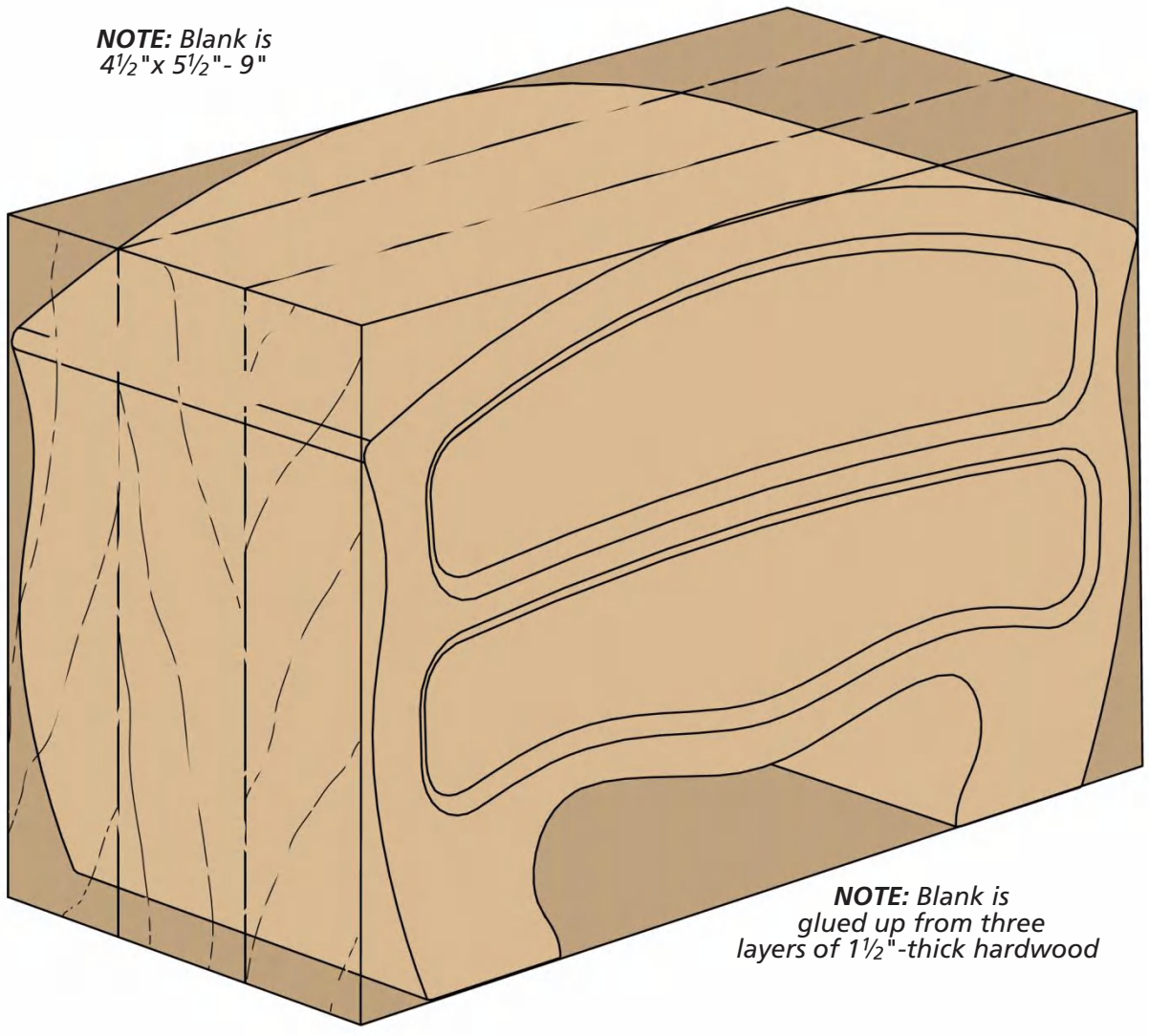


# Chest of DRAWERS

Like it's full-sized idol, this miniature chest of drawers features two drawers tucked inside a case. In my mind, this is the most "traditional" type of band saw box. Because of the depth of the case, you'll need to either start with 12/4 stock, or glue together stock into a blank, like I've done here.

**SHAPE FIRST.** After printing off a pattern from *Woodsmith.com/251*, attach it to the front of the blank. Then, cut the outside to shape. Here's where you can go wild and make whatever shape you want. Even though we've given you a guide, the main idea here is to get the technique down.

**REMOVE THE BACK.** At this point, you can position the fence and make a cut to remove the back of the case. Set it aside for now. Later you'll glue it back on after the drawers are done. For now, we'll concentrate on creating the drawers.

**DRAWER OPENINGS.** As you can see below in Figure 1, you'll cut out the drawers by making cuts from the opposite sides of the case. For the top drawer, I came in from the left side of the case and cut the drawer free. For the lower drawer, I came in from the opposite side to keep one side from becoming "squished." With the drawers removed, you can do a little sanding on the inside to remove any saw marks and loosen the fit a little (the drawer will be tight once you pinch the kerf closed). Then, spread some glue in both kerfs and clamp them back closed.

At this point, go ahead and glue the back on. It will not be a perfect fit due to the closed kerfs, but it will be close. After the glue is dry, sand the back flush with the case.

**NOW THE DRAWERS.** Cutting the drawers is next. And after you think of the drawer as a miniature case, you'll see how it takes shape (and of course, you can see it on the next page). Start by making a slice along the front and back of each drawer. This will remove the front and back of the drawer. With the remaining section, you can use a pencil

## DRAWER OPENINGS

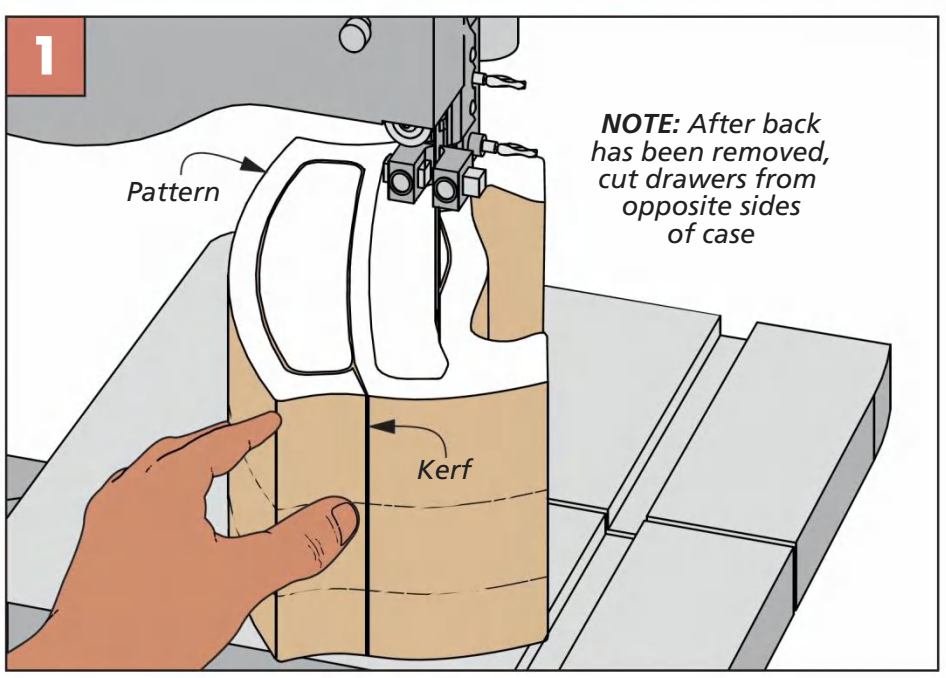


**Thin Kerfs.** Use a narrow, fine-toothed band saw blade to cut the drawer openings. Select a location and follow the grain lines for the least conspicuous glue joint.

with your finger as a gauge to rough in the shape of the drawer. Aim to leave about ¼" of material all the way around.

Cut out the waste from the drawers. You can see this in Figure 1, below. Then, you can sand it smooth. Reassemble the drawer and test the fit. If it slides in to the opening a little snug, sand the drawer a little. You want an easy fit into the opening. As a final detail on the drawers, you can soften the front edge. This can be done with either sandpaper or a small roundover bit in a palm router.

**FINAL DETAILS.** There are a few final details on this box that adds a next level of sophistication. The first is to add a small pull onto the front of each drawer. You can purchase these or make your own — dealer's choice. The next, is to flock the drawers.

**FLOCK IT.** As with the previous boxes, the inside of the drawers are flocked after applying a finish. But, the drawers aren't the only places that get flocked. The inside of the case can also be flocked. This adds a nice, easy feel as the drawer is opened, see inset photo on page 20.

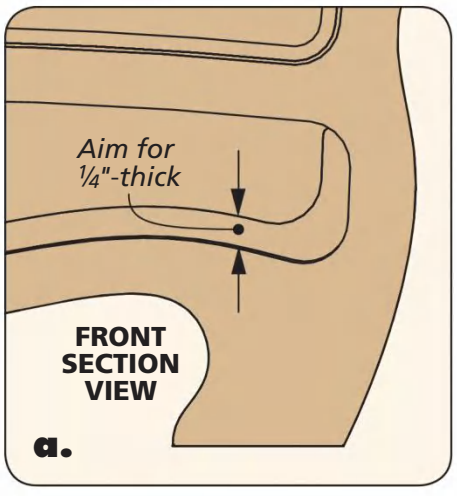


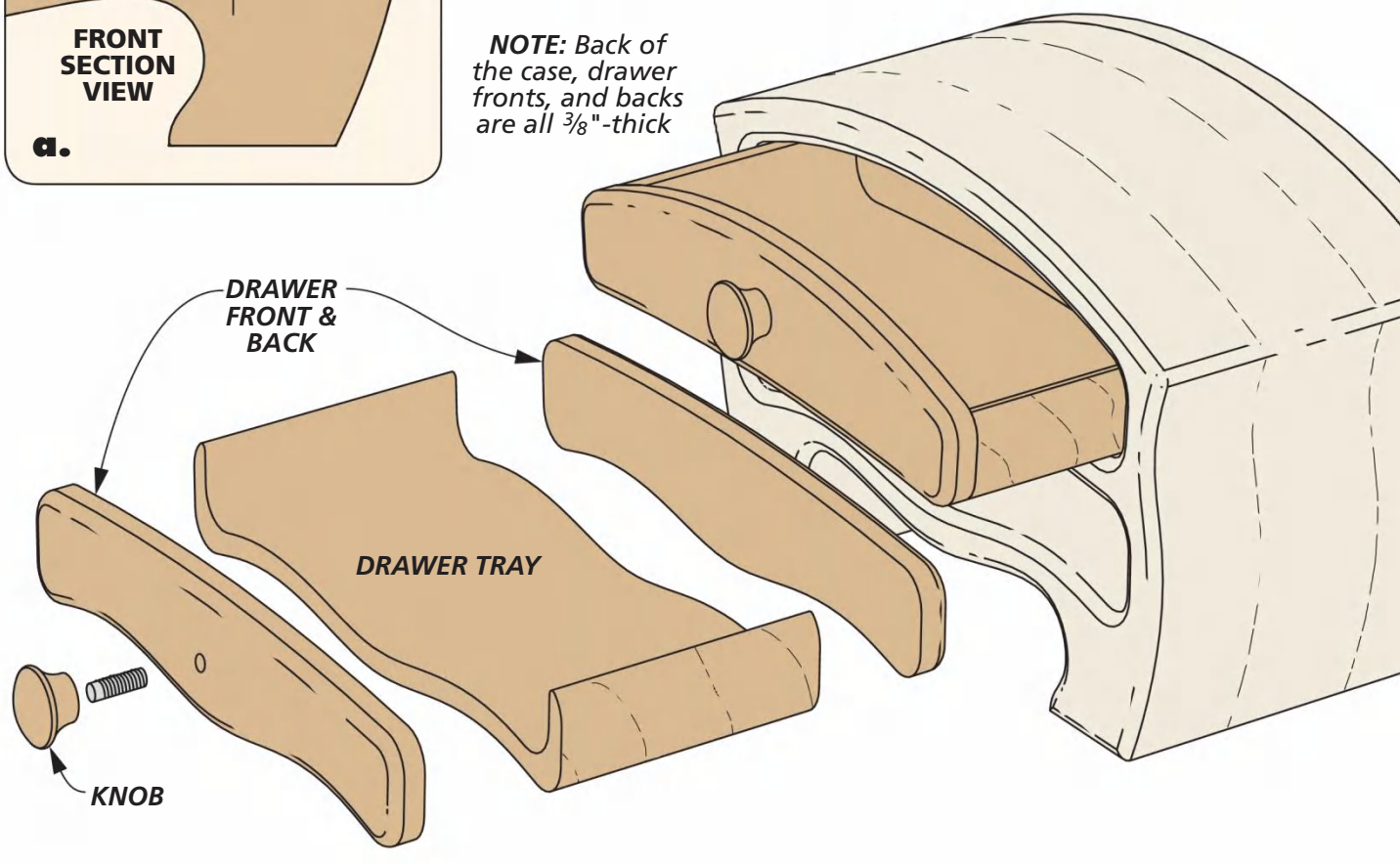


GO 2 Online Extras

For more on flocking the inside of your band saw box go to: WoodsmithSpecials.com

Flocking is pretty simple, even if you've never done it before. Most flocking will come in a kit and is readily available at craft stores. The kit will have adhesive and the flocking fiber. Paint the adhesive wherever you want flocking, making sure to get ample coverage.

Next, use either the shaker can, or the tube applicator to dust the adhesive with flocking. Get enough coverage here — I've found it's better to get too much than not enough. Once the adhesive is dry, you can shake any excess flocking onto a piece of paper and put it back in the bag.

As I mentioned at the beginning of this box — the main thing I hope you walk away with is the technique of making band saw boxes. If you make these exact boxes, great! But if you take these skills and make a set of boxes that are entirely your own, well, that's even better. W

## DRAWER INTERIOR

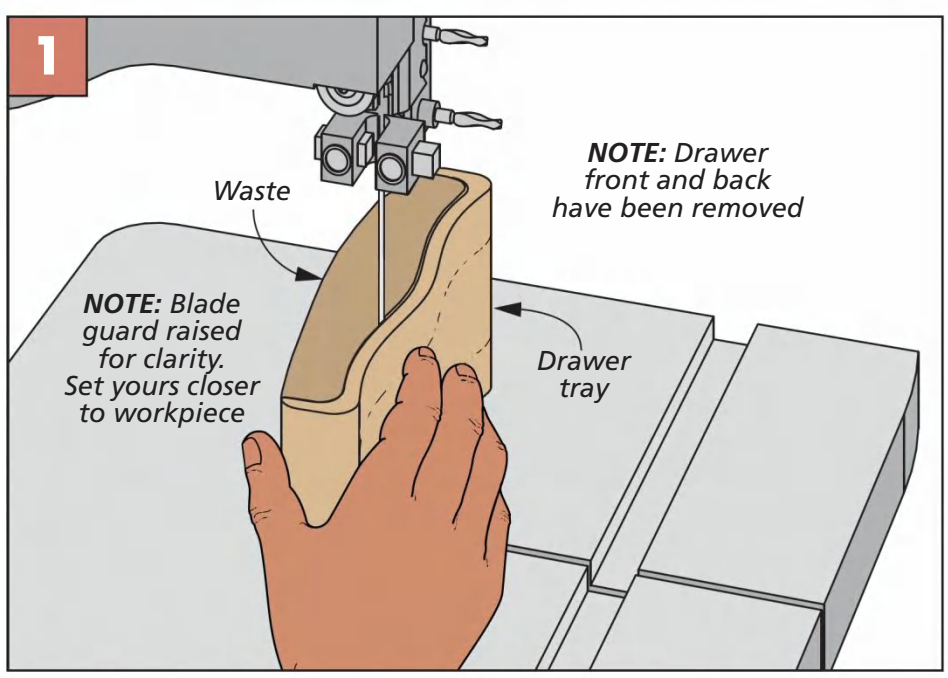


**Drawer Trays.** After removing the front and the back of the drawers, rough in a line for the drawer tray shape. Then, cut along that line to form the drawer.

# Kitchen Cart

Don't let its size fool you, there's a lot of style and functionality packed into this cart. It'll be a sturdy and handsome ally in any kitchen.

In a small kitchen, this cart could easily act as an island. In a larger environment, it can be just as happy to serve as a faithful sidekick to a permanent island. It's a butcher block, a veggie prep table, and a storage unit all combined. Plus, it's on wheels. Wheels that you'll make, as well. In fact, most of this cart is shop-made. (Hinges, bushings and a handful of screws are all that's on the hardware list.) A light hardware bill is always a good thing. But wait, there's more.

It's good looking from all sides. This is due to the designer's efforts and intention of keeping the cart as versatile as possible. I think he deserves high marks for the results.

The mitered edges on the oak case and flush rabbeted back of the same material provide visual love from all angles. The maple top and wheels provide a nice contrast.

The V-grooves in the doors give a little energy to the look of the cart. Having finger holes instead of knobs or pulls in the doors to access the inside was more than a cosmetic decision. It means that you can move the cart around without fears of snagging or scratching anything it might brush by. This project is fun from start to finish.

▲ The waste hole in the center of the maple top makes short work of clean up. A bowl in the space below collects the scrap for tidy disposal.

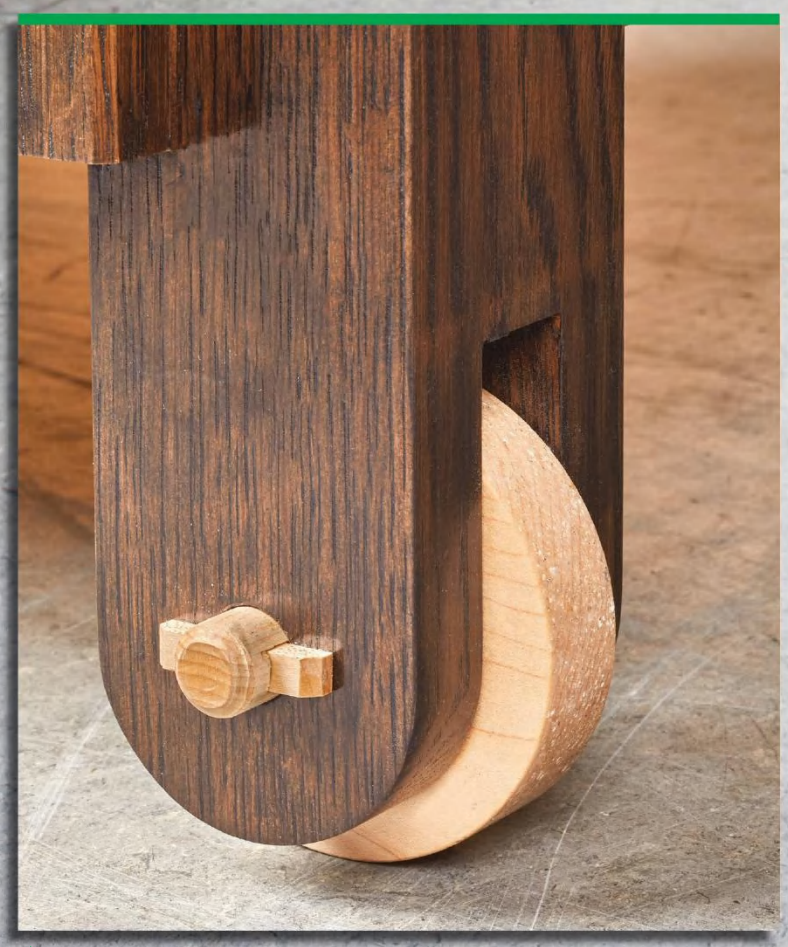

▲ Shop-made wheels and axles — yes please. The plastic bushing is the only part at this end of the project that you'll need to purchase.



Written & Illustrated by: Erich Lage

Project Design: Dillon Baker

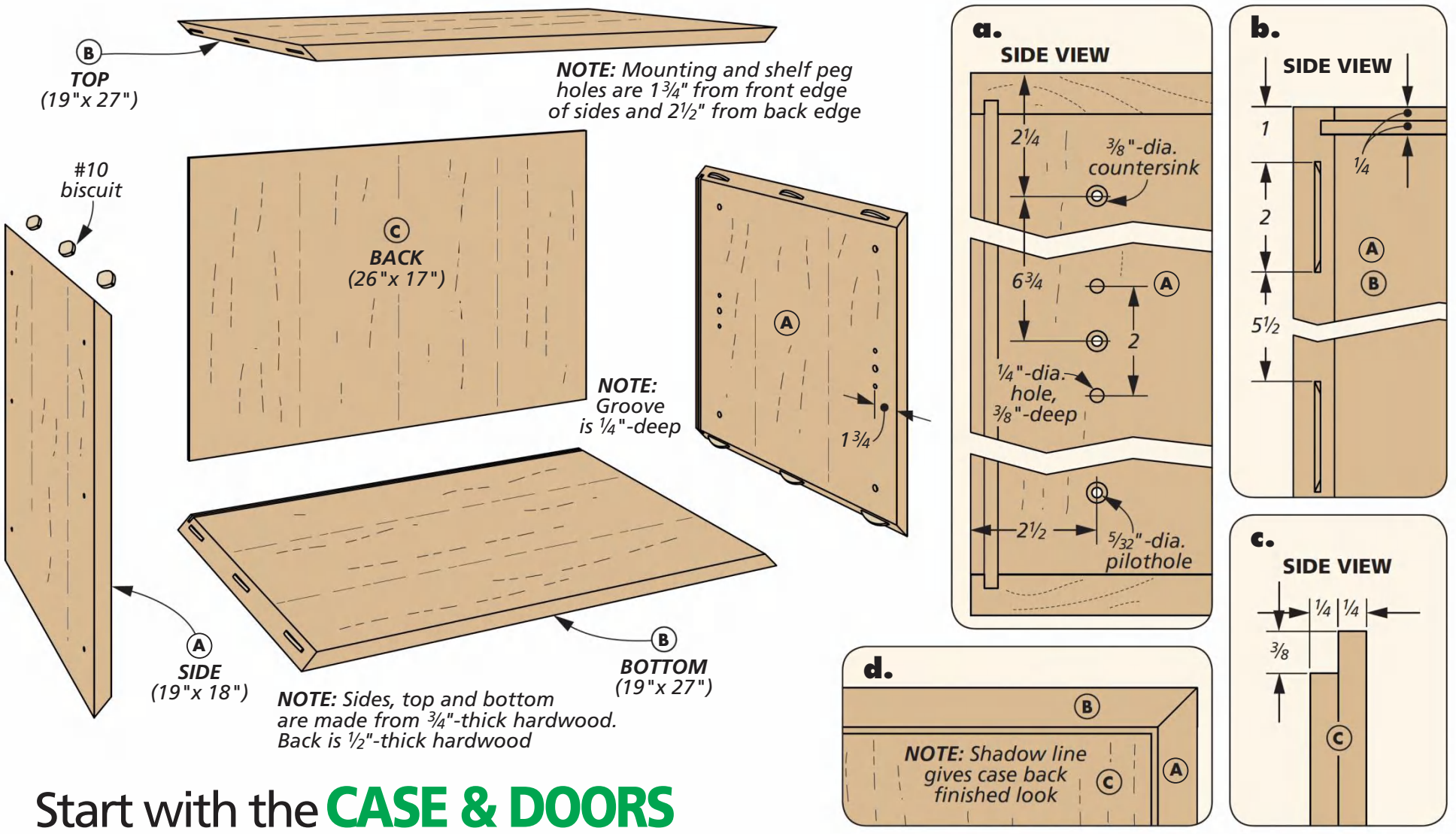


# Start with the CASE & DOORS

The case of the cart is made of hardwood panels. The back, as you see in the main drawing above and detail 'c,' is rabbeted to fit in the grooves cut into the case panels. The rabbet is sized to make the shadow line you see in detail 'd.' This little detail sets the cart free to roam around the kitchen and show a good face wherever it lands. Later on, you'll add an adjustable shelf to divide the inside of the case. The sides, top, and bottom are joined with miters for seamless corners. Biscuits hold them together. But enough chatter, it's time to work. Start by gluing up all the panels.

**GLUE UP.** The back is thinner than the rest of the case, so you'll spend a little time at the planer first. Back at the bench, glue up all the panels. Then trim them to size.

**PANEL PREPARATION.** The sides have some holes you need to attend to (detail 'a'). First, drill the six through holes on each side that will fasten the legs to the case. Then, drill the stopped holes for the shelf pegs. Next on the docket is to cut the miters.

The miters on the ends of the sides, top, and bottom, are 45° and cut at the table saw. The box to the left shows how to do this. Afterwards, you'll need to set the blade back to 90° and install your dado blade to cut the grooves for the back (detail 'b').

**BISCUIT SLOTS.** Mitered joints have a lot of glue surface, which is nice. But it's still end grain, and the miters can be devilishly hard to hold together until the glue sets. To avoid this headache, I incorporated a trio of biscuits in each joint. The spacing of the slots is shown in detail 'b.'

## CUTTING MITERS

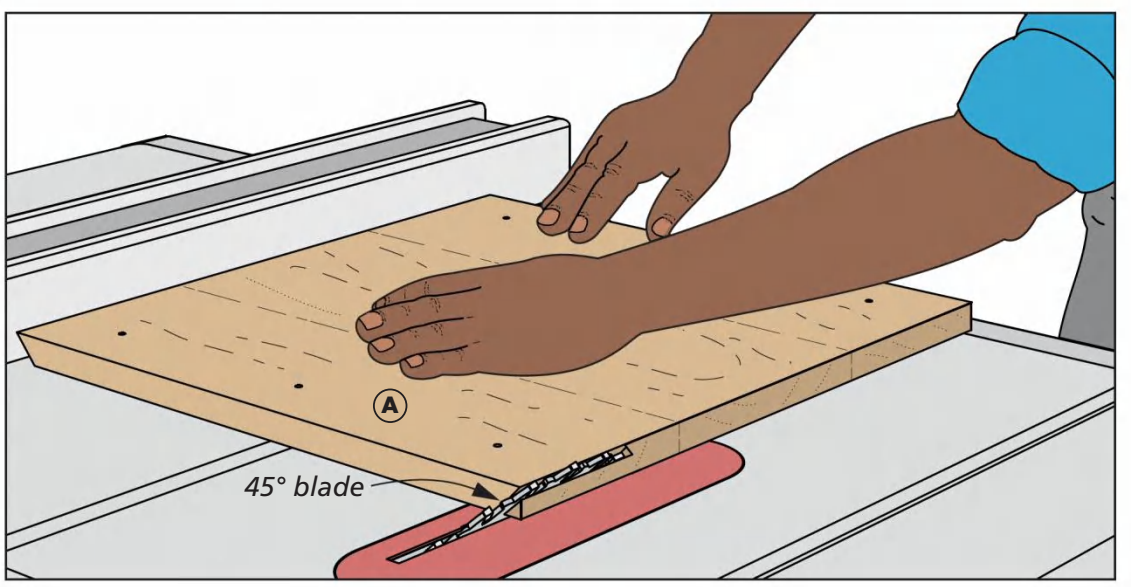


**Steady Feed.** To ensure that the miters will be even and come together without any gaps, feed the panels through the blade at a steady rate without stopping. On occasion I'll sneak up on the final lengths to achieve this.

**SIZING THE BACK.** To get the exact size of the back panel, I decided to dry assemble the case. Then I confirmed the dimensions needed for the back before cutting it to size and rabbeting the edges. It needs to be a whisker smaller than the opening created by the grooves. You don't want the panel to prevent the miters from closing.

It's best to do one more dry assembly. This time you'll have the back installed, and get to check for an evenly spaced shadow line between it and the case. Also, it will confirm that the miters close tightly.

**GLUE UP.** Now that you're in a happy place with the case assembly, you can bust out the glue and clamps. Don't get too hasty about all this, it's best to use slow-set glue, and let the back float. Even so, you'll want to have hot water, clean rags, and a putty knife on hand to excavate any glue that gets in that shadow line.

## DOORS

Hardwood doors are front and center on the case. They're glued up panels that have a series of V-grooves routed in the face. Start with the glueup.

Instead of hardware pulls or knobs, there are half-circle openings cut into the inside edges towards the top (detail 'c'). Cut away most of the waste with a jigsaw. You can make a simple template and rout the openings.

**V-GROOVES.** As you see in the box to the right, a V-groove bit in your router table combined with two spacers lets you rout all the grooves in the face of the doors. Finish with the chamfer on the sides of the doors (not the top or bottom edge).

**HARDWARE.** Yes, real hardware. Drill the holes in the back of the doors (detail 'b') and install the hinges. Now, the legs that hold this case are up next.

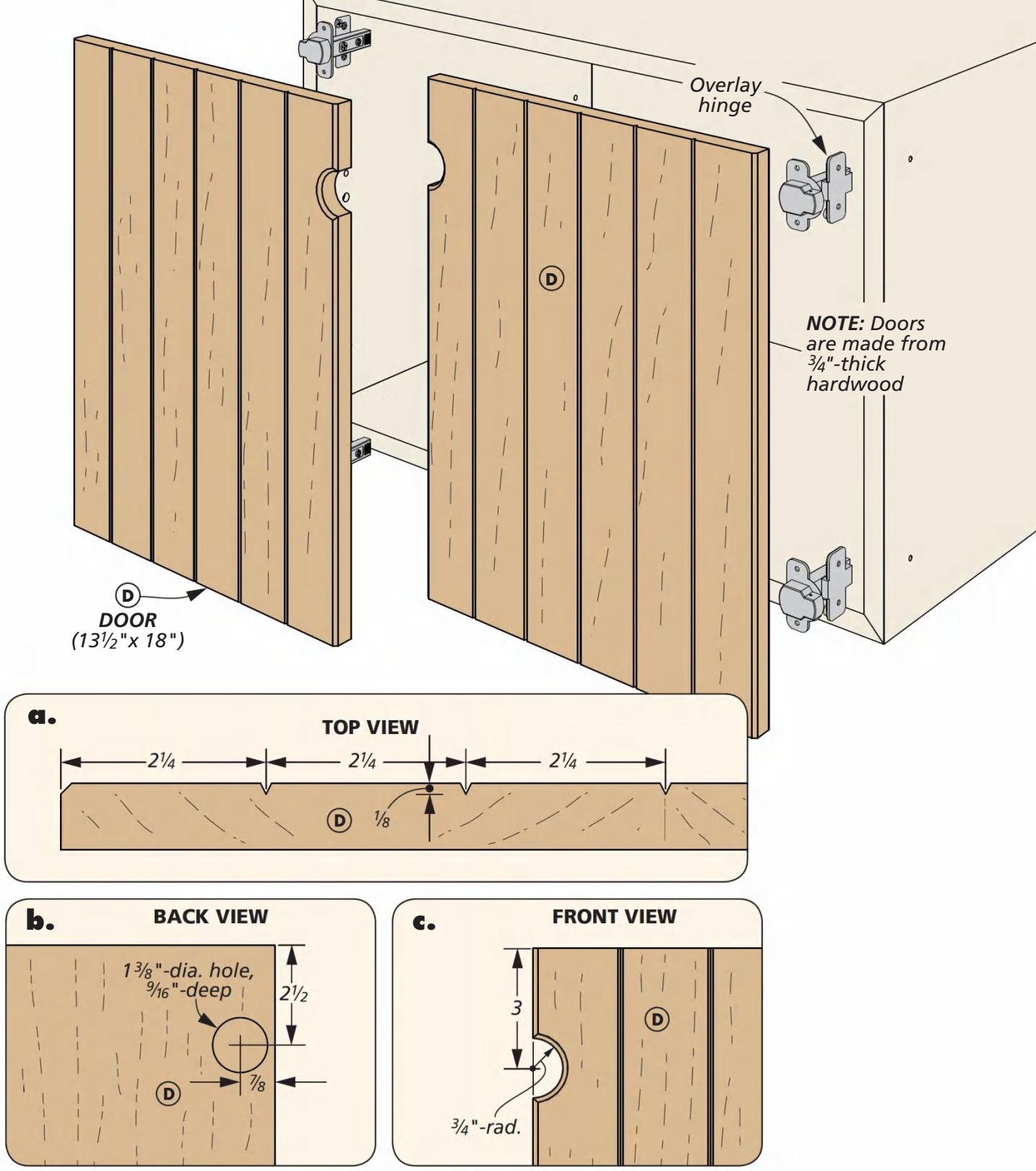


## V-GROOVES

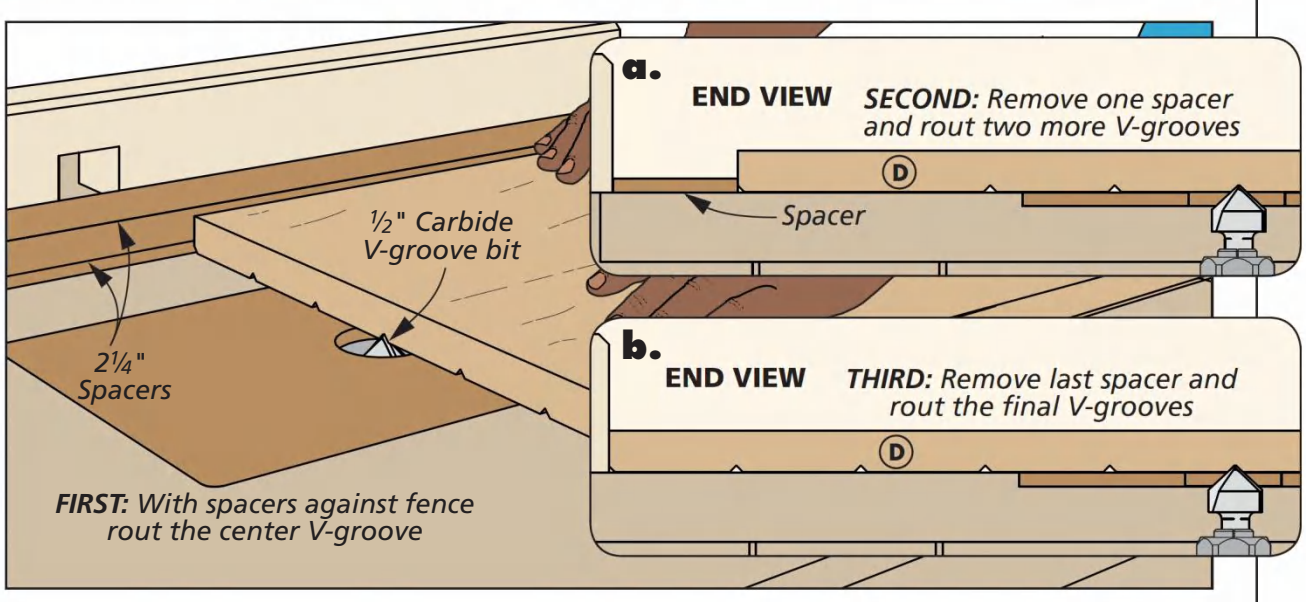


**Spacers Help.** To evenly space the grooves on the doors, use a set of spacers. Start with the center groove, then remove a spacer, and rout the next two (detail 'a'), flipping the door end for end. Remove the last spacer and repeat the step (detail 'b').

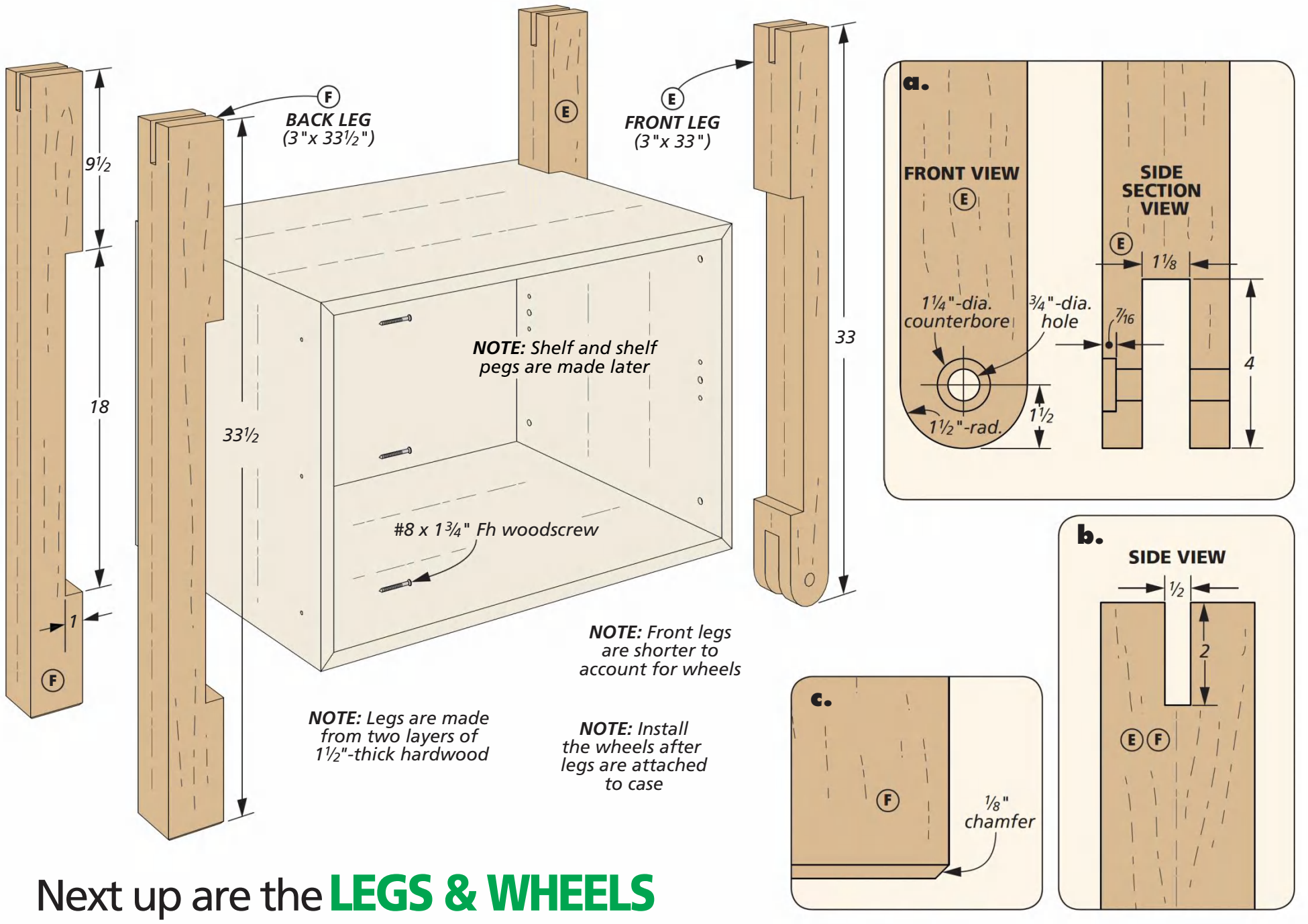


# Next up are the **LEGS & WHEELS**

The cornerstone of this stylish cart is the thick legs. As you see in the drawing above, there's long notches along the inside faces that wrap around the case and lift it off the ground for easy access. A narrow deep notch in the tops of the legs hold the stretchers, that in turn hold the top on the cart.

On the bottom end, the back legs are chamfered to prevent splintering. The front legs have notches at the bottom and holes to hold a hardwood axle for the wheels that you'll make. When the blanks are cleaned up and cut to size, I started at the drill press.

**DRILL PRESS.** In preparation for the drill press, I laid out the hole location and the radius that gets cut later (detail 'a'). Start by drilling the counterbore that holds the cap of the axle flush to the leg. Follow this with the through hole for the shaft of the axle. Use a backer board here to prevent blow-out.

**BAND SAW SETUP.** I used the fence of the band saw to locate the shoulders of the notches (detail 'a'). The box to the left shows this. The notches in the top of the legs are narrower (detail 'b'), but the process is the same.

**MORE NOTCHES.** The long notches for the case are next. This means moving over to the table saw. There, with an auxiliary fence attached to your miter gauge, cut the shoulders first. Then nibble away the waste in the middle and smooth the surface with a chisel.

**FINISHING TOUCHES.** Back at the band saw, cut the radius on the bottom of the front legs, then sand the surface smooth. The back legs are chamfered with a router, then all the legs are eased with a sanding block. Now it's time for some detail work.

## SLOTS IN THE LEGS

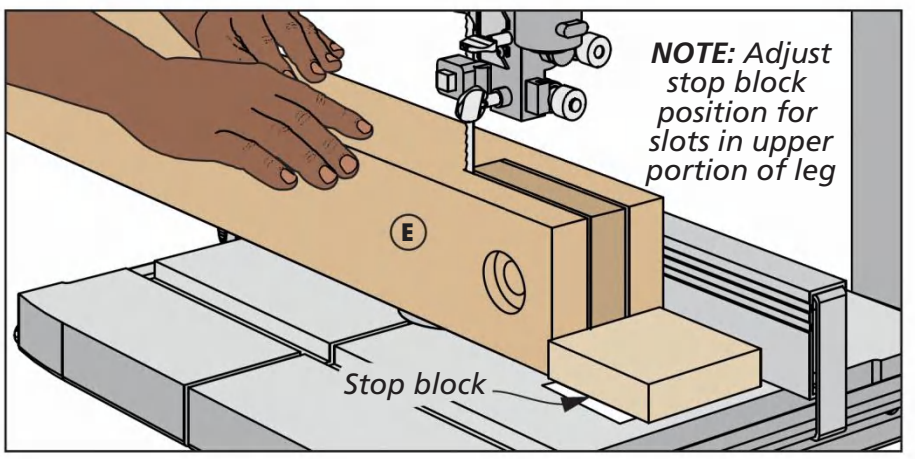


**Band Saw to the Rescue.** The deep notches in the legs are carved out at the band saw. The fence establishes the sides and a stop block controls the depth.

## AXLES & WHEELS

You could easily use store-bought axles and wheels, and if that floats your boat, go for it. But at times, small challenges can be just as rewarding as big tasks. I found that to be true while making these parts.

The axle and its cap are made from dowels (detail 'a'). The axle wedge is a little piece of hardwood (detail 'c'). And the wheel (detail 'b') is a bigger piece of hardwood that you'll shape with a template at the router table. Start with the axle assembly first.

**AXLE CAP.** To guarantee the axle is centered in the cap, and allows the wheel to turn smoothly in the leg, I used the leg to guide the Forstner bit. Figure 1 in the box below has the details. Now you can work on the dowel that is the shaft of the axle.

**AXLE DETAILS.** The axle shaft is a ¾" dowel that, on one end, fits into a cap. The other end, that protrudes out of the leg is chamfered (detail 'a'). This end of the axle sticks out of the leg far enough to allow a wedge to run though it, locking the wheel in place. Since drilling the through mortise (at a mortising machine) is the hardest part of the operation, I did that first. After that, trimming and shaping the ends was a breeze. To finish the axle, I glued the cap to the shaft.

**WEDGE.** Next I made the wedge you see in detail 'c'. It's just a little piece of wood that I sanded chamfers on the front edges by sticking a piece of sandpaper on my table saw top. Leave this a little thick for the moment, you'll fit it shortly.

**WHEELS.** To start, I made a template for the wheels with a circle cutter and a scrap of MDF. Figure 2 shows how this is used to make the wheels. Before you pop the template free, drill a dimple in the wheel through the hole the circle cutter made. The dimple will be the guide for the larger hole that holds the bushing that the axle rides in.

**INSTALL THE WHEELS.** Sand the back of the wedge as needed for a tight fit and glue it in place. That completes the legs, it's time to work on the upper pieces, starting with the stretchers.

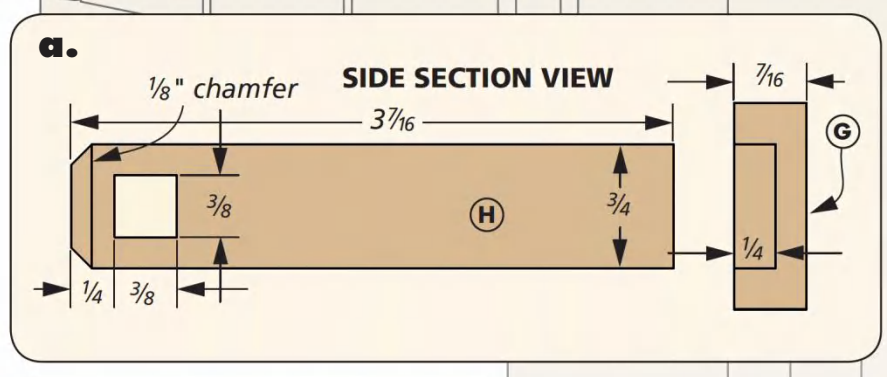


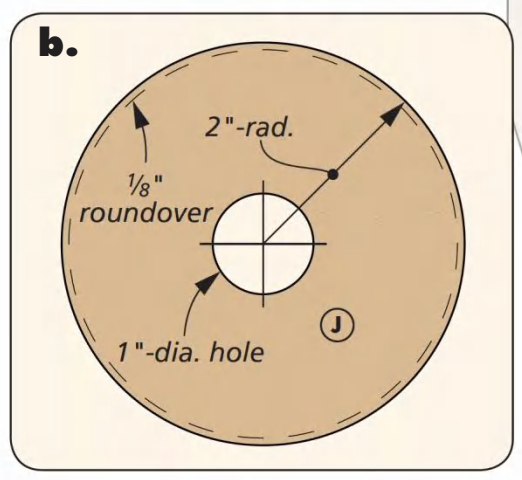


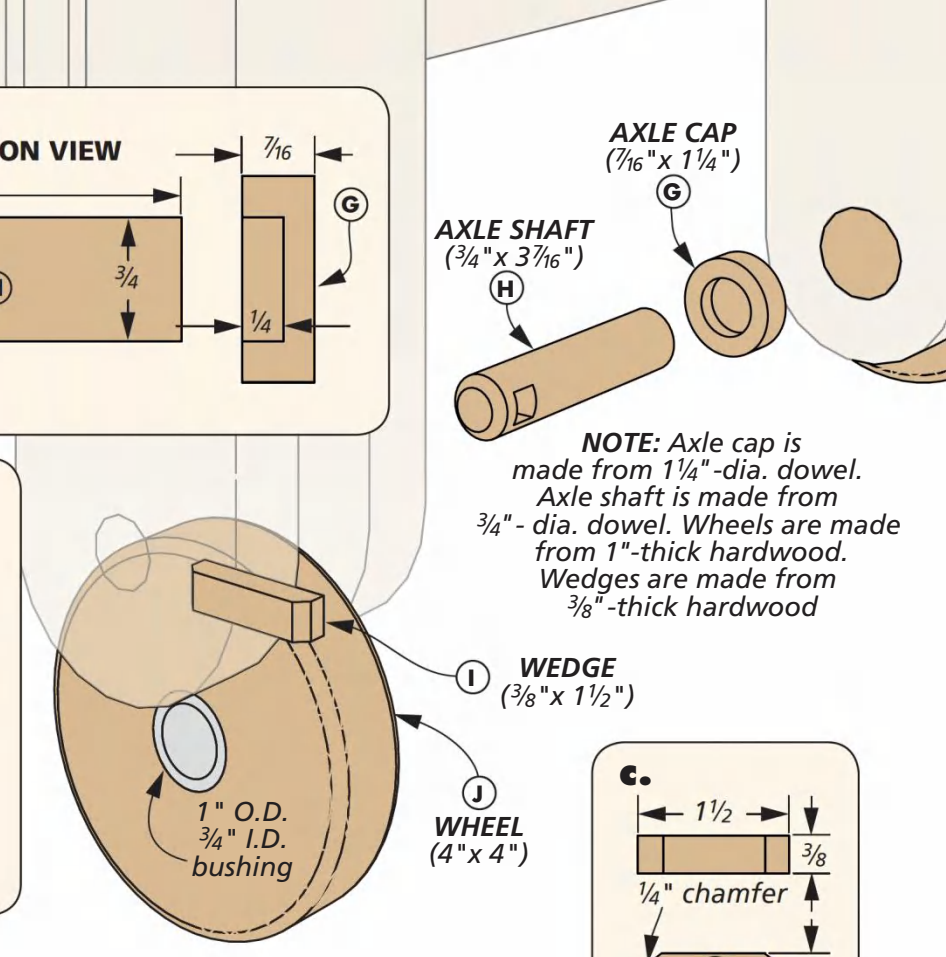


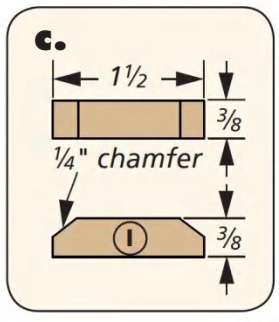


## WHEEL DETAILS

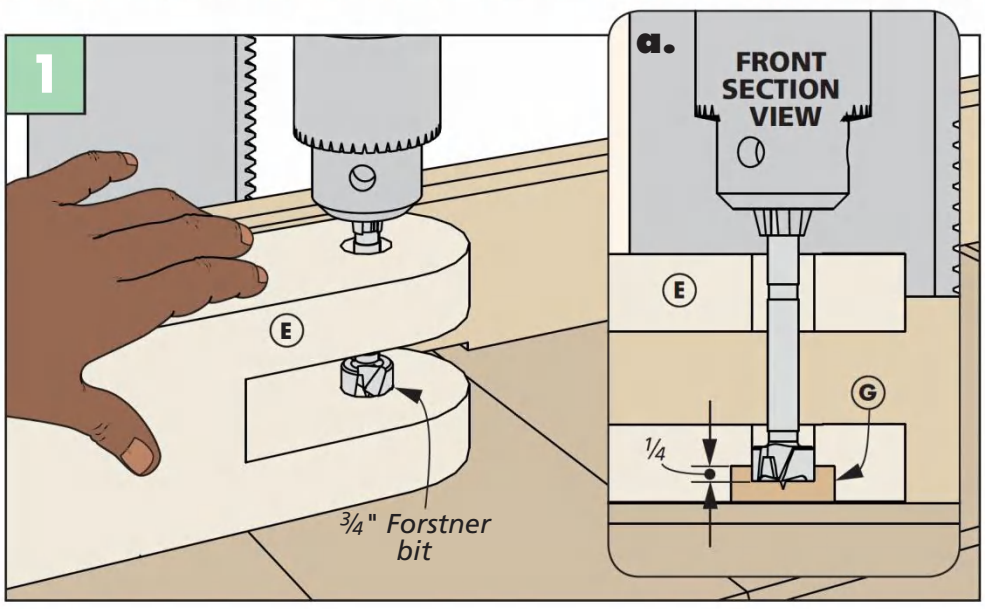


**Drill the Axle Cap.** The axle has to be centered in the opening for the wheel to roll smoothly. To accomplish this I taped the cap in the opening of the leg and drilled the hole for the axle at the drill press.

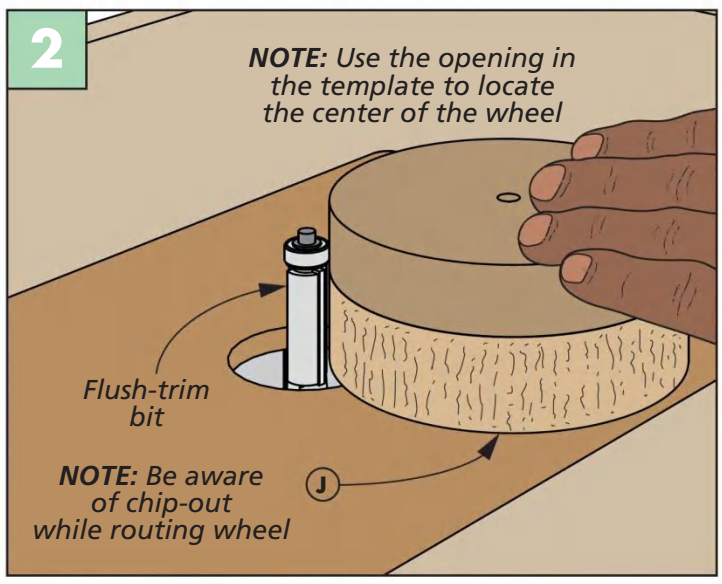


**Shape the Wheel.** A pattern taped to a blank that has been rough cut, guides a flush-trim bit that's installed in your router table.

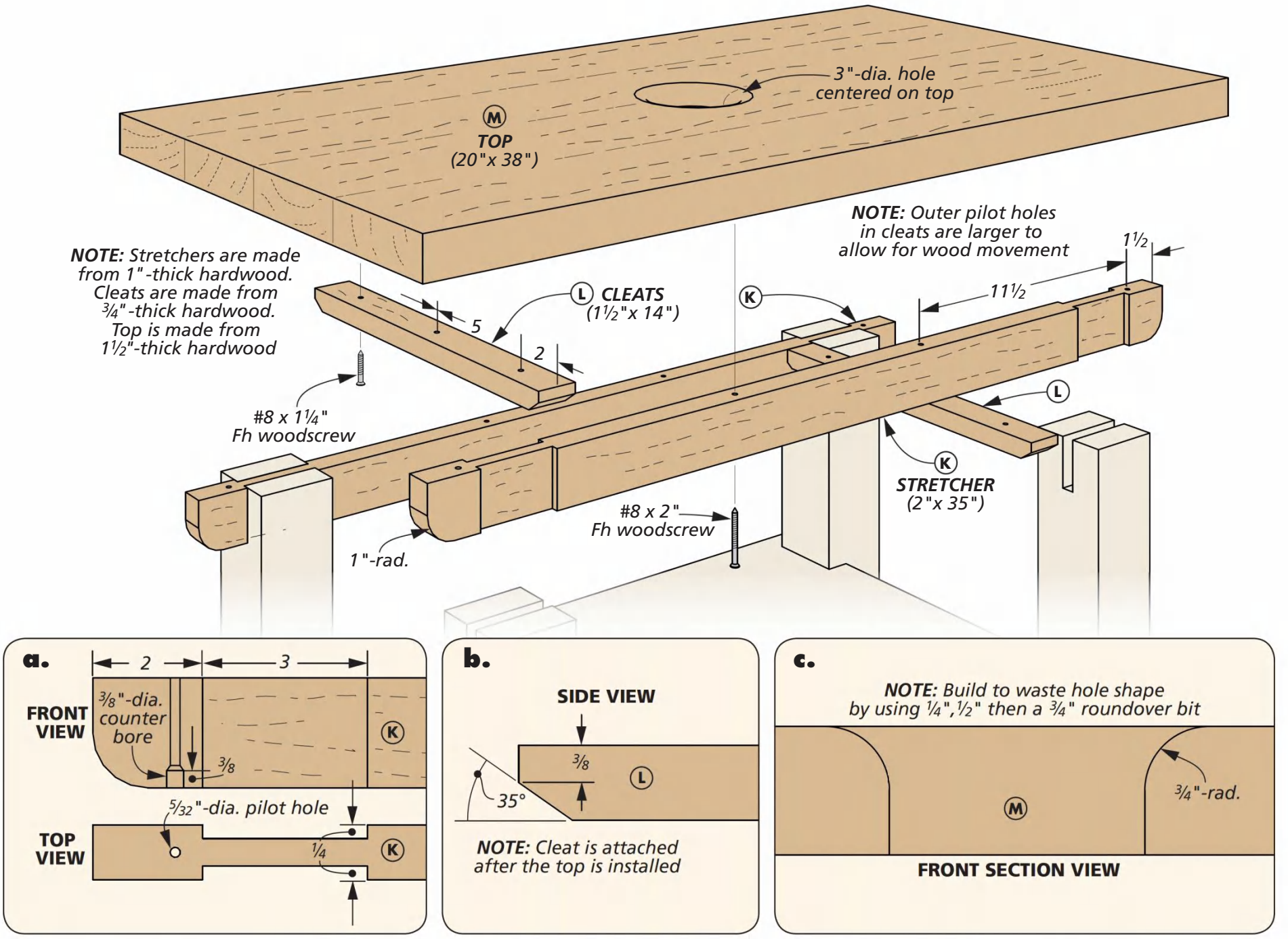


# Finish up with a TOP & SHELF

Well, this little cart project is winding down. There's only a handful of things left to do. There are stretchers and cleats to make that will tie the top to the base. The top is after that. Then you'll finish with a shelf and some shop-made pegs to support them. Let's get cracking.

**STRETCHERS.** The best place to start is with the two long hardwood stretchers. They're fit to the notches you made in the top of the legs (detail 'a'). To hold the top in place, the stretchers have four mounting holes each. The bottom corners are rounded. I started this work by making the dadoes that join with the legs.

On both ends of the stretchers, cut dadoes at the table saw. Start with the shoulders first, then nibble away the waste in between. At the drill press, the countersink holes come first, then the pilot holes. All that's left is to round over the lower corners I mentioned. Rough out the profiles at the band saw and sand them smooth.

**GLUE IN PLACE.** Now you can take the stretchers back to the cart. There, with a little glue, and some F-clamps applied, you can call this step done.

**CLEATS.** The cleats are simple things really, they run from front to back in between the legs (main drawing and detail 'b'). Three countersunk holes for mounting to the top. The cleats are installed after the top is attached to the stretchers. So set them aside and get after the top.

## TOP

You can't go wrong with the solid maple top that you see in the main drawing above. This thick top is perfect for all the chores a kitchen can throw at it. The waste hole in the center funnels all your scraps to a bowl that will whisk them away. Start by gluing up the boards needed.

**TRIM TO SIZE.** Try to get the top boards aligned during the glue up. No worries though if things are off a little. A flush-trim bit and straightedge will tidy up the ends.

**BIG HOLE.** With the center of the top marked clearly, and a three-inch hole saw in hand, you can make the rough opening for the waste hole. Take your time doing this and clean the teeth

of the saw often. This will minimize burning the wood (a spindle sander is the tool of choice, if any burning occurs).

**ROUT THE OPENING.** To avoid more burning wood, I rounded over the edge of the hole in stages. This involves several sizes of roundover bits. Detail 'c' on the previous page has the information needed.

## SHELF & PEGS

The shelf is a hardwood panel supported by, you guessed it, shop-made shelf pegs. You know the marching orders on making the panel. Let's talk a little bit about the pegs.

**PEGS ARE DOWELS.** The center-finding head for my combination square and a sharp pencil locates my drilling position in the ½" dowel. In holding this short dowel in place, the little handscrew that I've had some buyer's remorse over, has just graduated to the "tools I've used" list. Glue the two pieces together and smooth the edges.

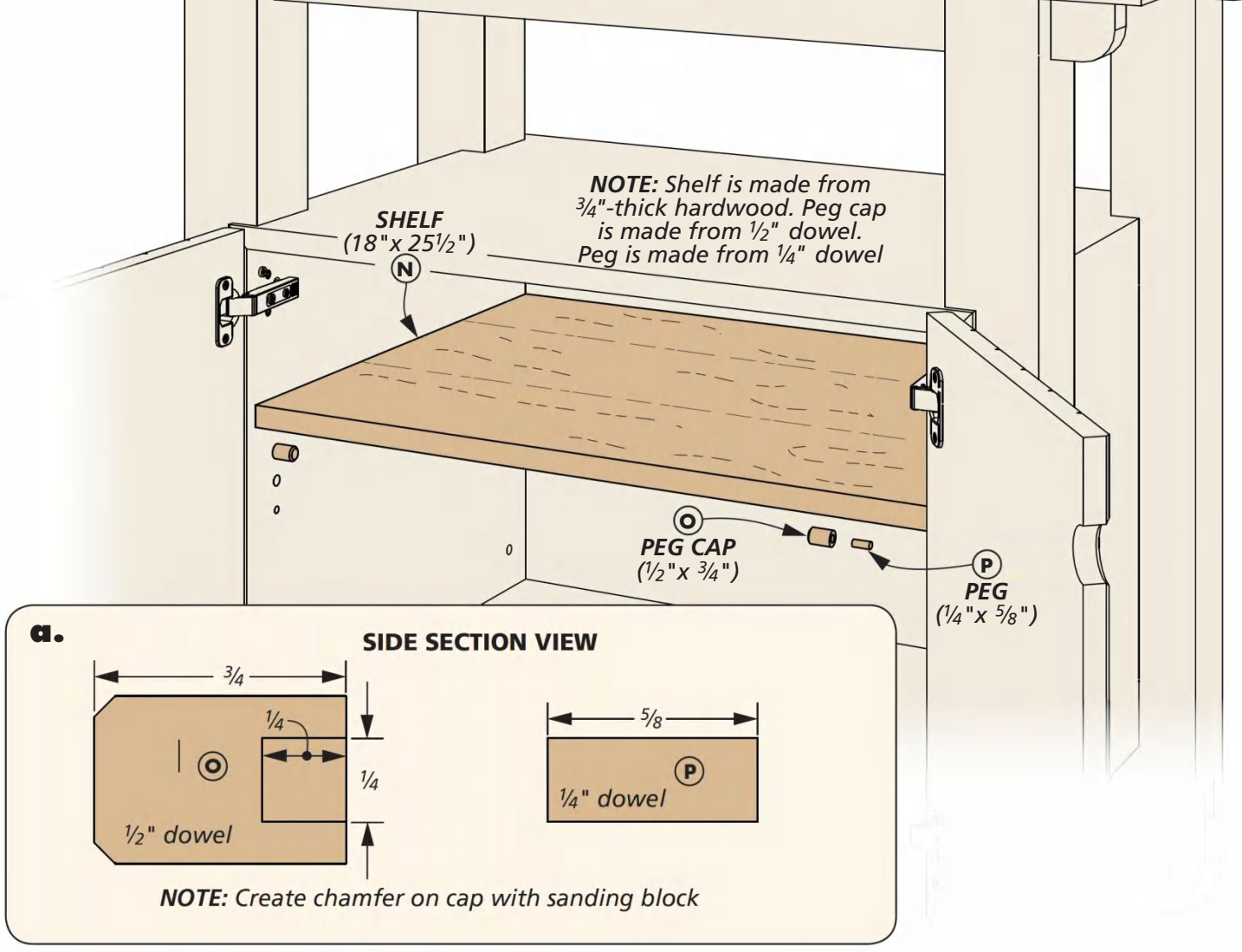


**FINAL TOUCHES.** After screwing the top in place (and attaching the cleats to the underside), I sanded the surface to 320-grit. After easing all the corners with a sanding block, I oiled it (along with the wheels) with a coat of *Boos* butcher block oil. Apply it by hand, then remove the excess after five minutes.

Rolling it from the shop to the house made one thing clear. This stout little kitchen accessory is ready for years of service. W

## Materials, Supplies & Cutting Diagram

| | | |
|---|---|---|
| **A** | Sides (2) | ¾ x 19 - 18 |
| **B** | Top/Bottom (2) | ¾ x 19 - 27 |
| **C** | Back (1) | ½ x 26 - 17 |
| **D** | Doors (2) | ¾ x 13½ - 18 |
| **E** | Front Legs (2) | 3 - 3 x 33 |
| **F** | Back Legs (2) | 3 x 3 - 33½ |
| **G** | Axle Caps (2) | 1¼-dia x 7/16 dowel |
| **H** | Axle Shafts (2) | ¾-dia.x 3 7/16 dowel |
| **I** | Wedges (2) | ⅜ x ⅜ - 1½ |
| **J** | Wheels (2) | 1 x 4 - 4 |
| **K** | Stretchers (2) | 1 x 2 - 35 |
| **L** | Cleats (2) | ¾ x 1½ - 14 |
| **M** | Top (1) | 1½ x 20 - 38 |
| **N** | Shelf (1) | ¾ x 18 - 25½ |
| **O** | Peg Caps (4) | ½-dia x ¾ dowel |
| **P** | Pegs (4) | ¼-dia x ⅝ dowel |

- (12) 10#-Biscuits
- (2) 1"ID x ¾"ID-dia. Nylon Bushings
- (12) #8 x 1¾" Fh Woodscrews
- (8) #8 x 2" Fh Woodscrews
- (6) #8 x 1¼" Fh Woodscrews
- (4) 120° Overlay Hinges

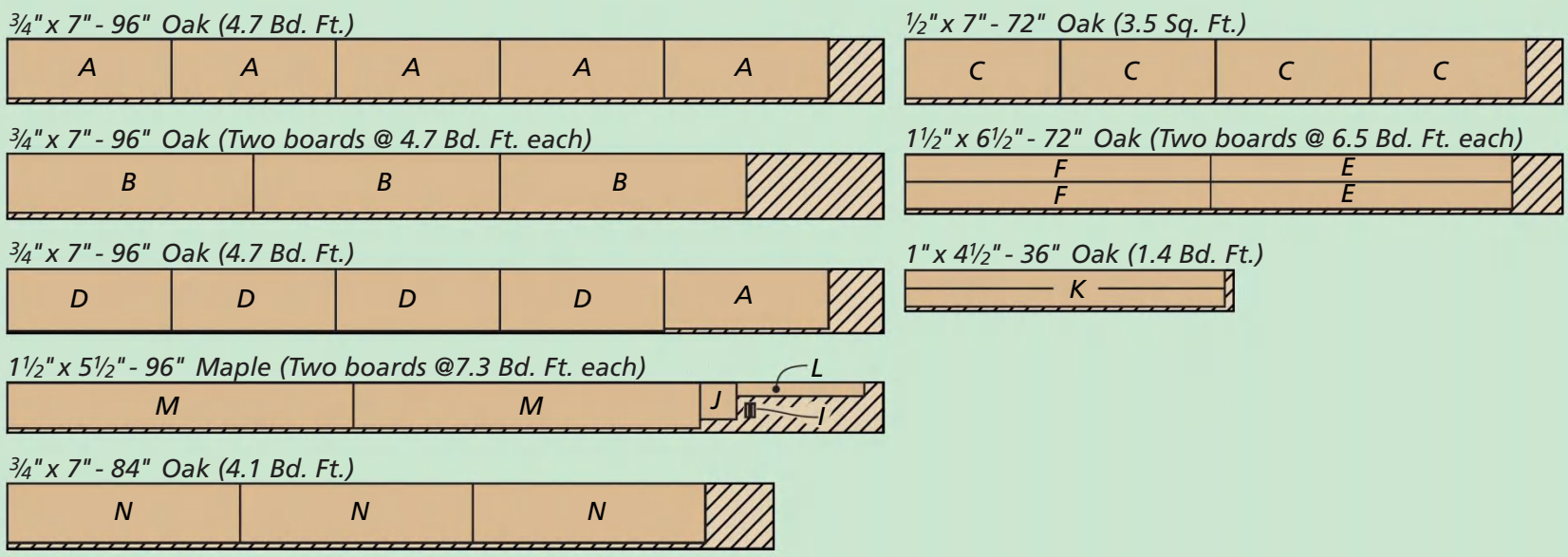

Written by: Erich Lage, Project Design; Chris Fitch

# Piecrust Table

This dainty-looking piece of furniture is anything but that. Underneath the delicate features is a dynamic little workhorse.

▲ A generously sized top is at the ready when needed. Not only does it support everything required but the top twirls to allow company access to the teapot, cream or sugar.

▲ If the ornate top doesn't suit your fancy, there's a no-frills version of the top available online. This sleek version has an elegance and charm all its own.

Although the term "form follows function" wasn't around at the time, this piecrust table is a perfect example of that sentiment. Born in the eighteenth century as a vehicle to show off the fact that you could afford tea (very expensive at the time) was its main role.

Then again, being able to afford tea doesn't mean you lived in a palace with marble floors. This table is happy to accommodate a small environment with a top that tilts vertically for easy storage. And having three legs prevents the table from rocking on an uneven surface like those fussy four-legged tables do.

The woodworking challenges of this project cover a pretty wide gamut. Out of the gate you're going to spend some time at the lathe making the post that's the backbone of this piece. Then you have a quiet task with rasps and files to form the legs, followed by the matrimonial act of dovetailing the two together.

But you're not done yet. There's more time at the lathe making spindles for the birdcage. Which isn't your typical aviary — this one will constrain the wonderful top you see in all these photos that pivots up and down as needed.

The top, if you so choose, has a lot of luscious carving that can be done with a modest trio of chisels. That's a full plate by any standards. So if you're up for a fun journey, turn the page.

◄ When not in service, the top of the table can be tilted vertical. This lets you store the table out of the way, and yet still be an attractive addition to the room.

Illustrator: Dirk Ver Steeg

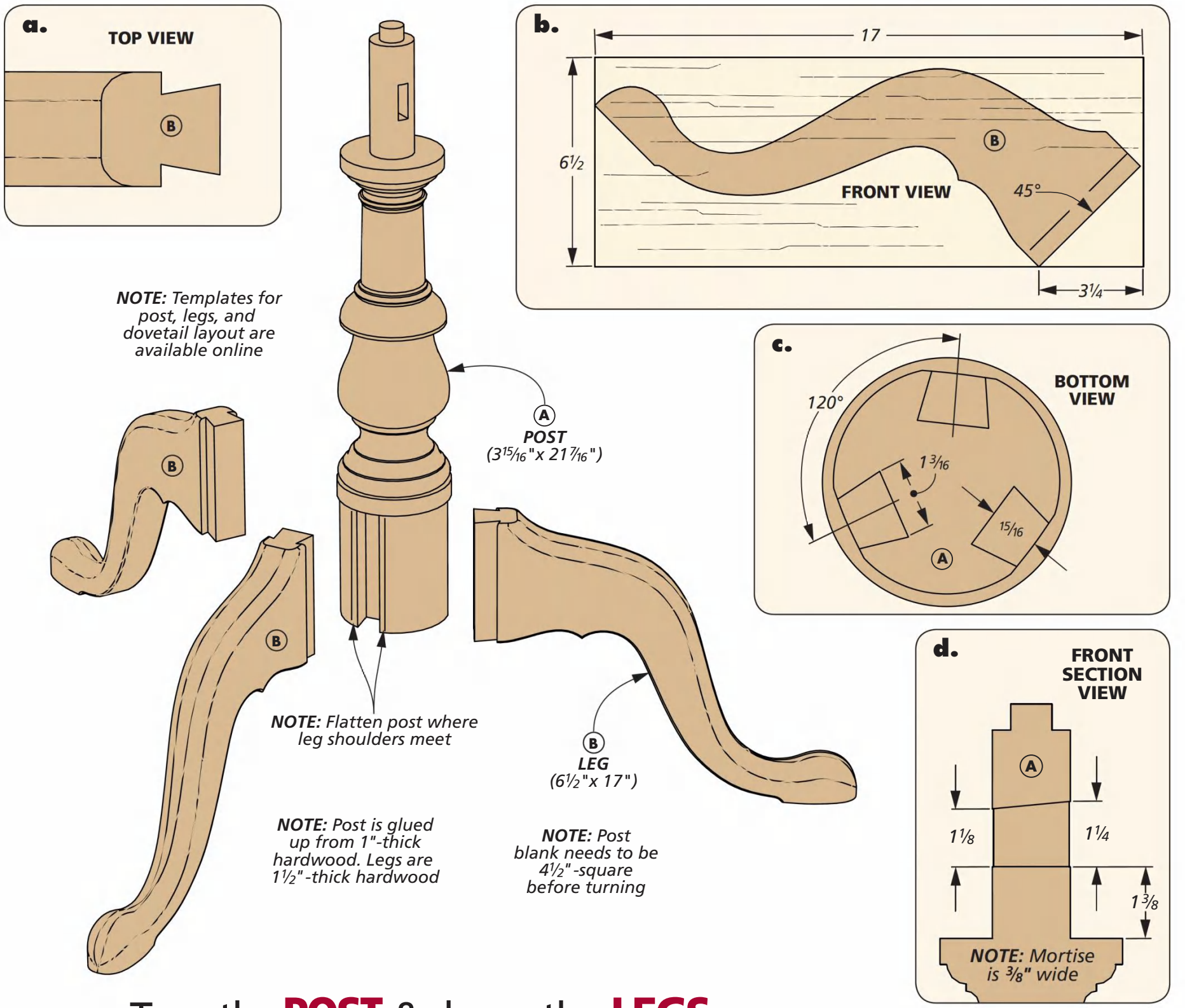


# Turn the POST & shape the LEGS

For alternate top, dovetail jig, post, and leg patterns, go to: Woodsmith.com/251

Turning the post and spindles (the spindles are tackled on page 39) requires a pattern for each profile. You'll find full-sized versions online for both at *Woodsmith.com/251*.

The post you see in the drawing above is larger and features a few more details than the spindles have. The upper end has a stem like the ones on the spindles. But you'll need to cut a mortise through it that's flat on the bottom but tapered on the top (detail 'd').

The lower end of the post is where things get busy. You'll need to cut three long dovetail slots to receive the legs. Not to worry, there's a jig that will help you navigate that.

**TURN THE BIG DOG.** Next, glue up the blank, trim the corners, chuck it into the lathe and turn the profile (Figure 1 on the next page). But, leave a temporary ¾" stem on the bottom. It's what holds the post in the jig while routing dovetails for the legs.

**DOVETAIL SLOTS.** The three dovetail slots in the lower portion of the post are 120° apart. There's a template that helps locate the position of each leg on the post. Just print it out and use spray adhesive to attach it to the post.

**SETTING UP THE JIG.** The jig you see in Figure 2 aids in routing the slots for the legs. Align one of the marks on the template to the center of the opening for the dovetail bit and drive the locking screw into the post. After routing each of the dovetail slots, all you have to do is loosen the screw and rotate the post to the next mark on the template.

**MORTISE IN STEM.** At the other end of the post, drill a series of holes to create a slot (Figure 3). Detail 'b,' shows using a chisel to square the bottom and taper the top. That completes the post, now you can focus on the legs.

## LEGS

To make the legs as strong as possible, run the grain of the 8/4 leg blank parallel with the profile of the leg. Cut the angled shoulder at the table saw. Then you can cut out the profile of the leg at the band saw (Figure 4).

**DOVETAILS.** Figure 5 shows how to make the dovetails on the ends of the legs. Rounding the contour of the shoulders to fit the post would be a lot of work. It's easier to flatten the post on either side of the dovetail groove to make a seamless fit.

**SHAPING THE LEG.** Notice how the legs are thinner at the ankle of and then wider again at the foot (Figure 6). When the shaping is done, lightly sand the edges and glue the legs in place. Now it's on to making the parts that rest and revolve on this base.

# TURNING A POST & SHAPING THE LEGS

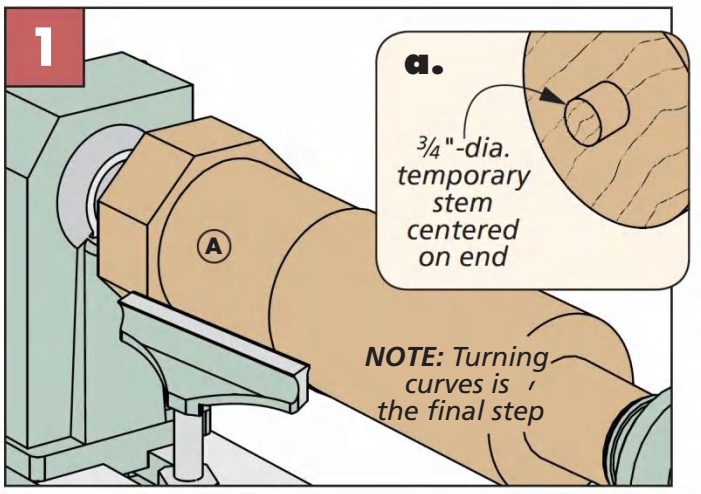


**Turning Time** Rip the corners of the turning blank first, then turn the largest diameter. Next, turn the straight portions at the ends.

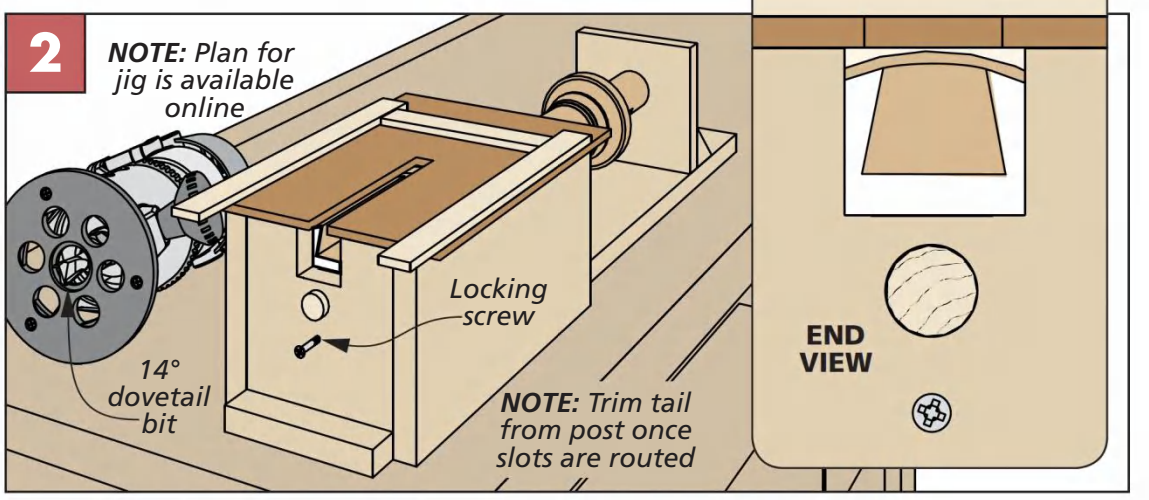


**Routing the Dovetails.** Routing the slots is a two-step process. Once the leg is in place, make a pass with a straight bit to remove most of the waste. Then, as you see here, make the final pass with the dovetail bit.

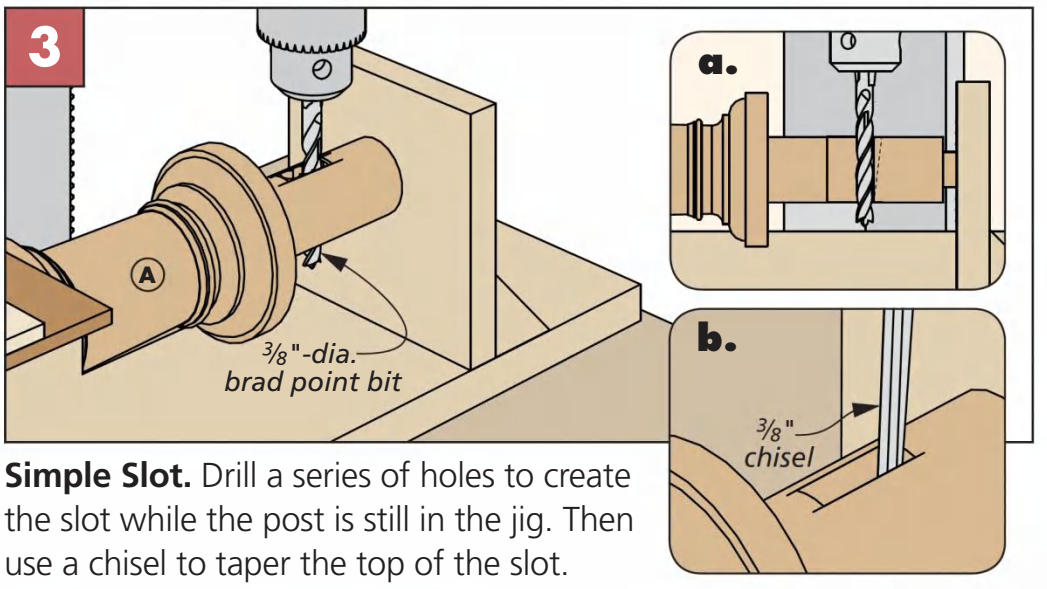


**Simple Slot.** Drill a series of holes to create the slot while the post is still in the jig. Then use a chisel to taper the top of the slot.

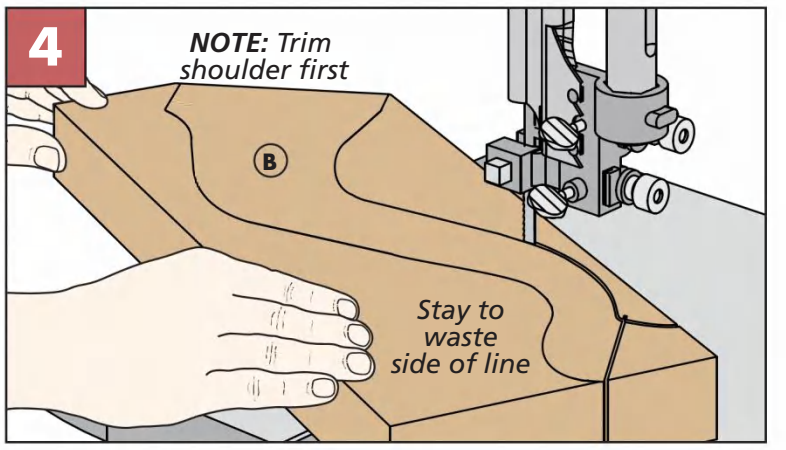


**Rough Out Leg.** Trim the dovetail end first. The band saw makes short work of roughing out the leg. Stay just to the waste side of the line as you go.

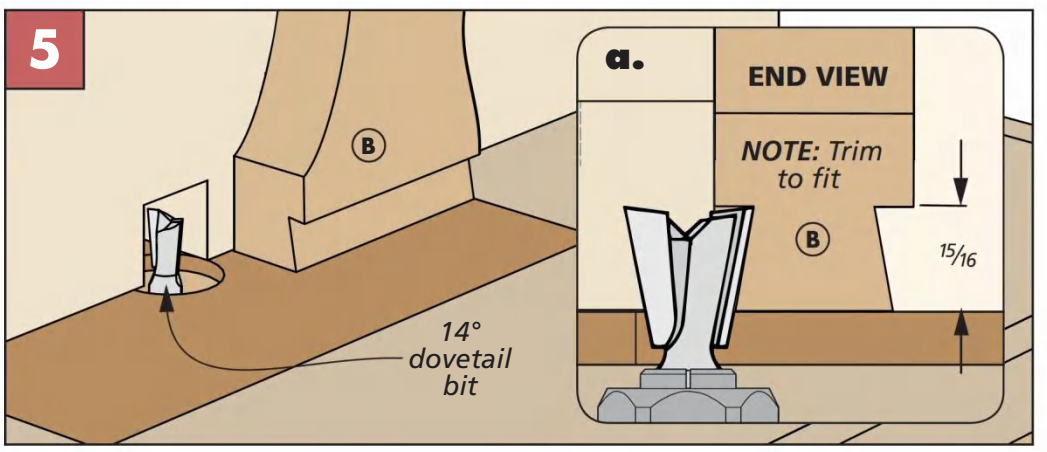


**Shaping the Dovetails.** The router table is the only way to go when forming the dovetail on the leg. To make life wonderful, sneak up on the final width, testing the fit in the slots of the post as you go.

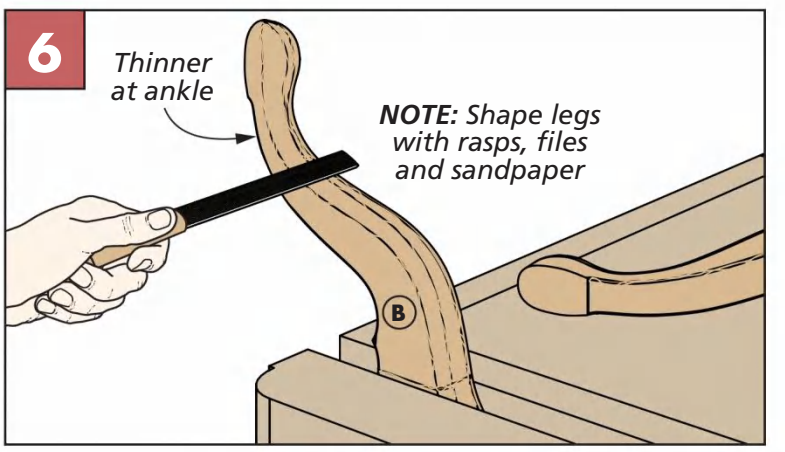


**Shapely Legs.** Invest in some quiet time at the bench with rasps, files, and sandpaper. You'll be happy with the organic touch it brings to the table.

# Now for the **BIRDCAGE & BATTENS**

Now that the base of the table is finished, you can turn your attention to the parts that will join the base to the top. The device that brings the two together is historically called a birdcage.

This assembly adds a dynamic level to the table. It allows you to spin the top in all directions. Also, you'll be able to tilt the top to 90° to store the piece away when not in use.

The birdcage consists of six parts. First, four spindles create the cage effect of the assembly. They are glued to the top and bottom plates. The bottom piece has a hole in it for the stem of the post to pass through. The top has two pins that fit into sockets in the battens, and a stopped hole to register it to the post. Start off by turning the spindles.

**SPINDLES FIRST.** The decorative profile is not as important as the length of the spindles (the pattern is at the top of the next page). For the birdcage to operate properly, the length must be the same. A slightly crooked birdcage will telegraph the error and make the top look crooked.

**TOP & BOTTOM PLATES.** Although the body of the two pieces is the same size overall, the two pins on the top that I mentioned extend beyond that basic dimension. Cut the two pieces to size, then turn your attention to the top plate first (detail 'c').

**ADDING PINS.** Figure 1 on the next page shows how to solve the riddle of adding pins to the top plate. But don't glue them in just yet, there are more holes to drill. (These were the most difficult holes to drill, so I wanted to have them out of the way first.)

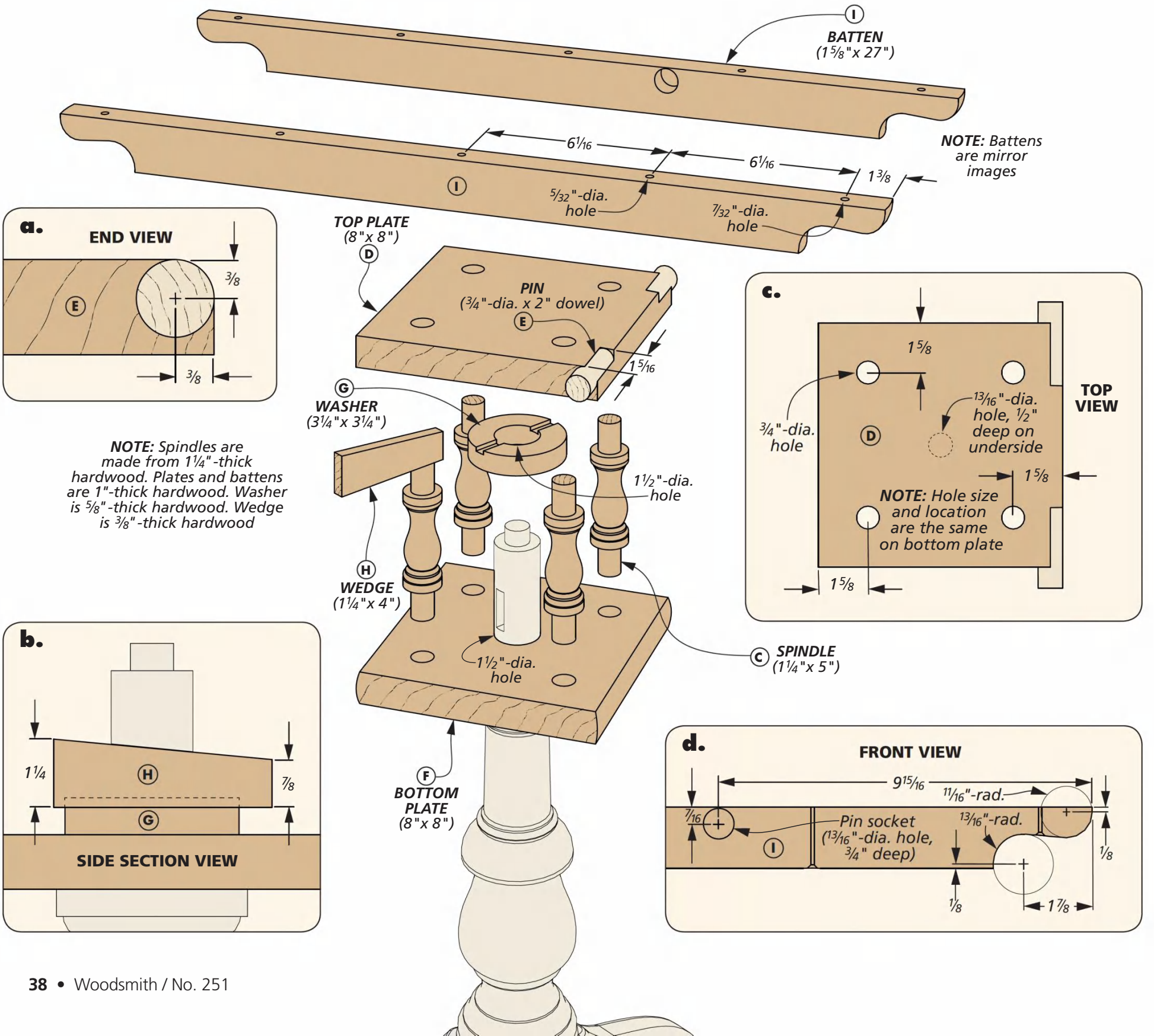

**HOLES.** Both pieces have four through holes. These hold the stems of the spindles and can be drilled next. Then drill the large hole in the bottom for the tenon on the post. Follow this with the stopped hole on the underside of the top piece for the top of the post (detail 'c' previous page).

To complete the top plate, you can glue the pins in place. As for the bottom plate, dress the edges as shown in Figure 2.

**WASHER & WEDGE.** The washer and wedge are the gatekeepers on how the top turns. The main drawing on the previous page and detail 'b' show these.

The washer starts out as a square blank that you drill a centered hole for the stem of the post to pass through. Figure 3 below tells the rest of the story.

To be more accurate, the wedge is what controls the turning of the top. You're ready to make that piece now.

## BATTENS

The battens tie the birdcage to the top and serve two purposes. They hold the top flat and allow you to tilt it vertically for storage.

**SIZE & SHAPE.** The battens are made from 5/4 stock. Use the information in detail 'd' on the previous page to shape the ends of the battens. A jigsaw or band saw will do this task best.

Sand the curves smooth afterwards. The ends have a subtle radius to soften the look, which can be done with a disc sander.

The mounting holes are next. First drill the pilot holes, then the countersinks. Notice that the outer holes are larger to allow for wood movement in the top.

Speaking of the top, you'll need to make it before the battens can be brought into play. As you see in the main drawing, the battens don't attach to the birdcage per se. So for now set the battens aside, turn the page and haul out your carving tools.

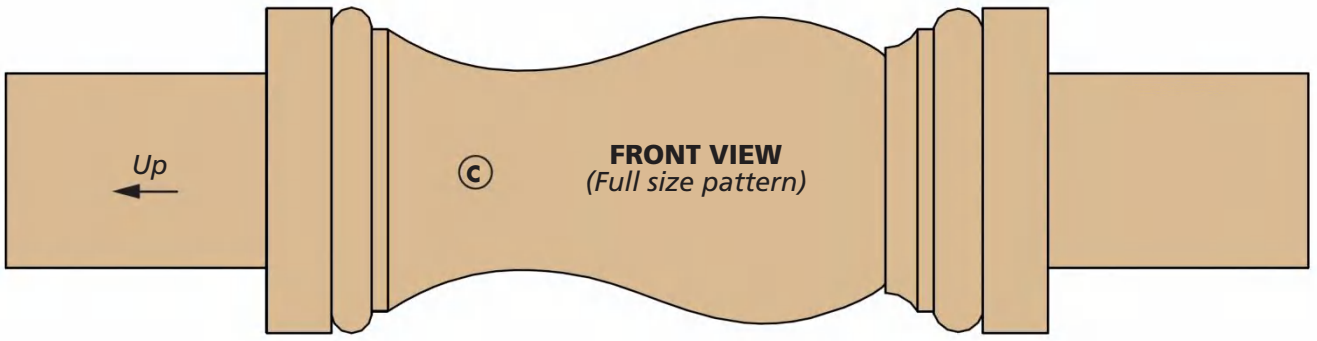


## MAKING THE BIRDCAGE

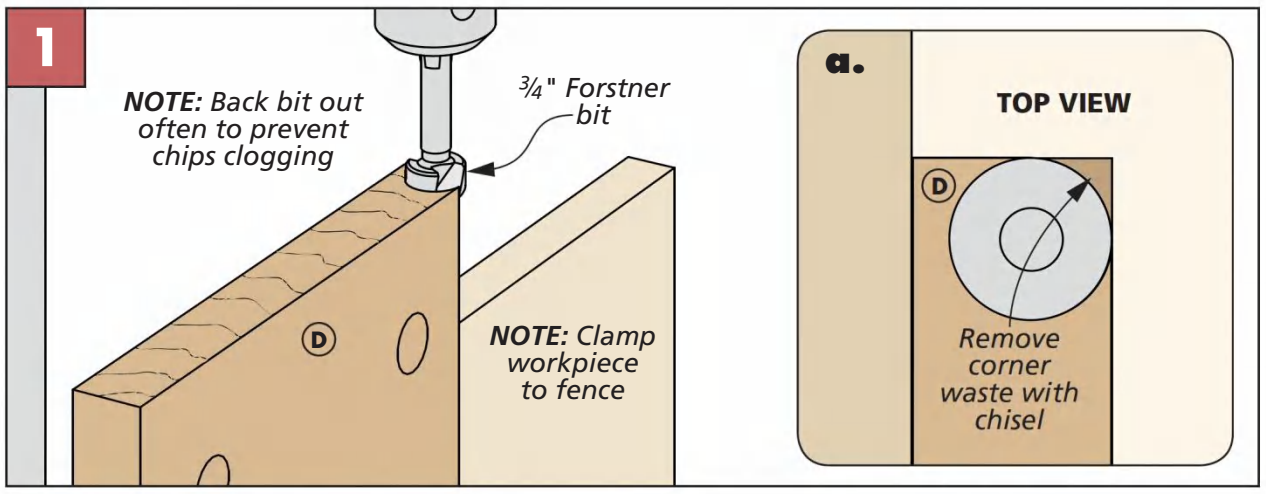


**Make Way for Pins.** The drill press armed with a Forstner bit is the way to tackle this job. Clamp the workpiece to the fence and take your time drilling this hole.

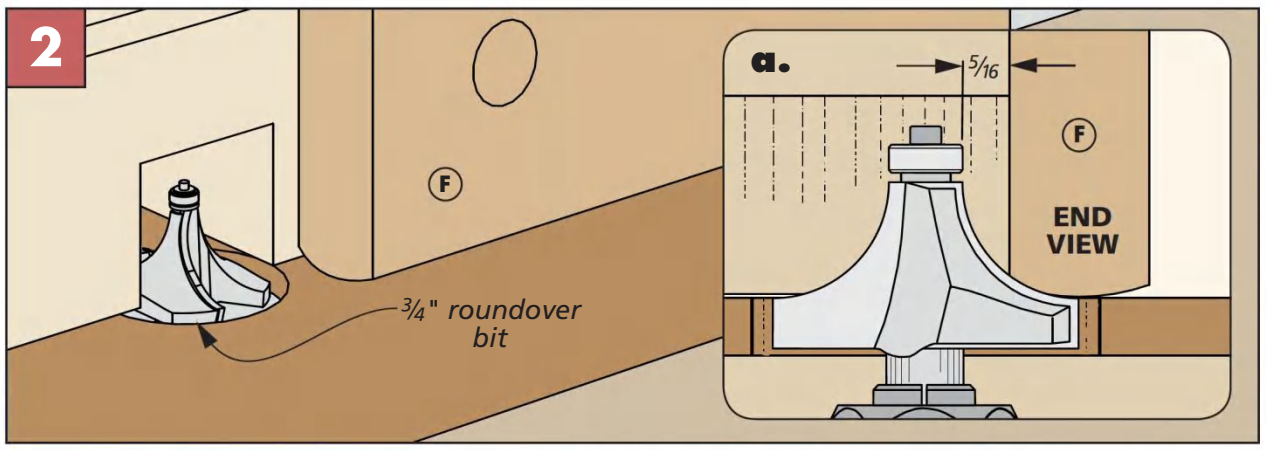


**Ease the Edges.** Use a large roundover bit in your router table to ease all the edges of the bottom of the birdcage. The top piece doesn't get this treatment.

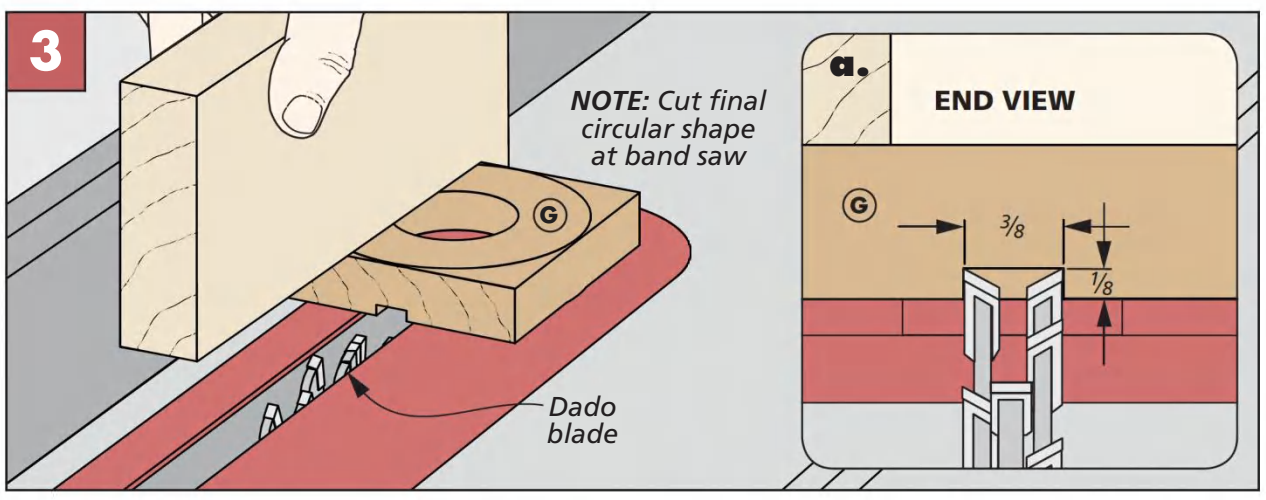


**Slot in the Washer.** After drilling the hole in the washer, and before rounding it, cut a groove in it at the table saw. The slot is the same thickness as the wedge.

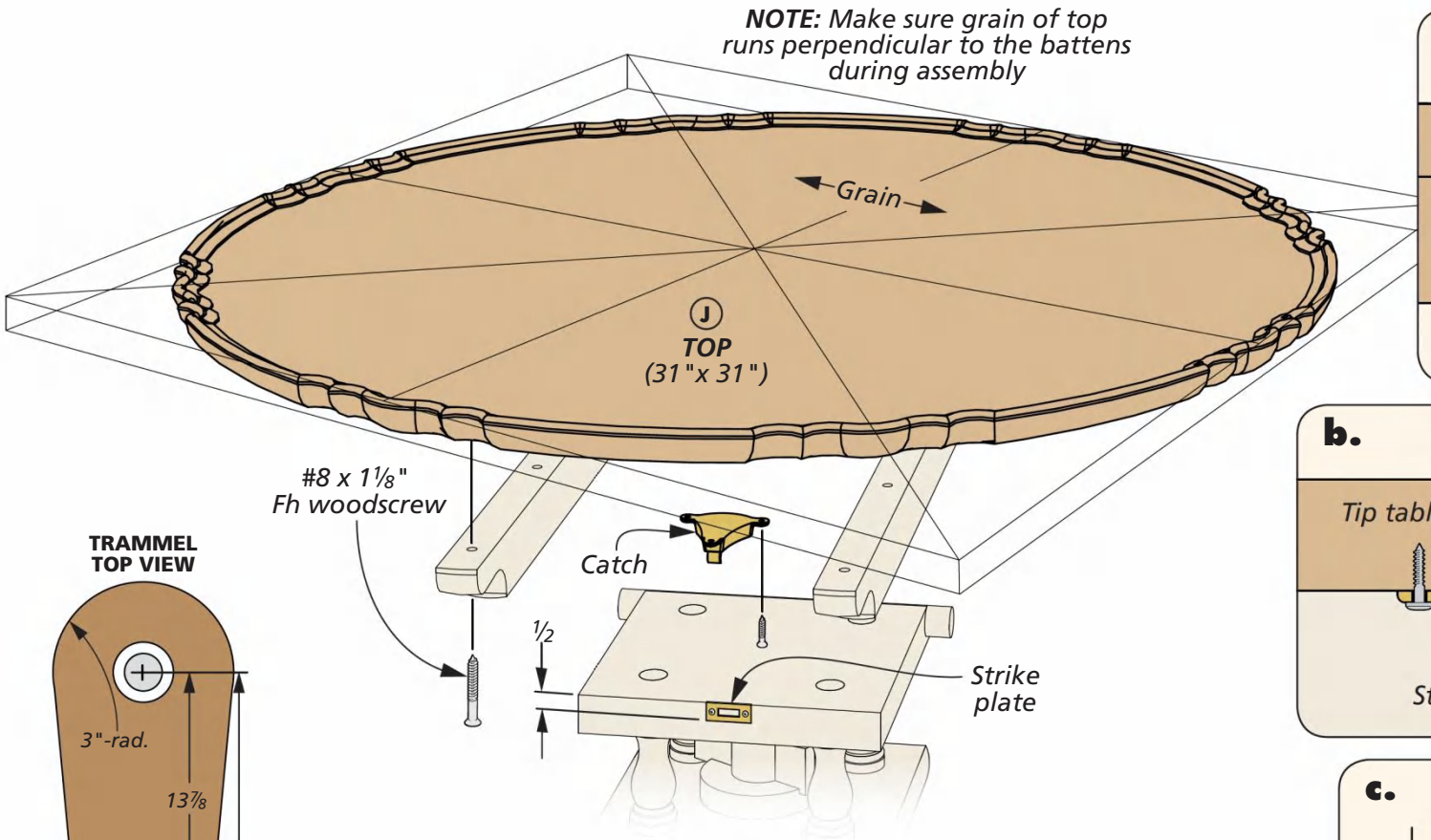


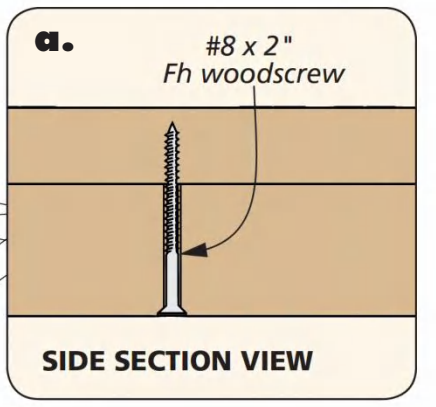


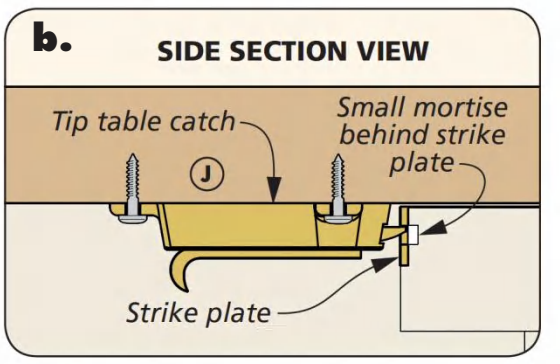


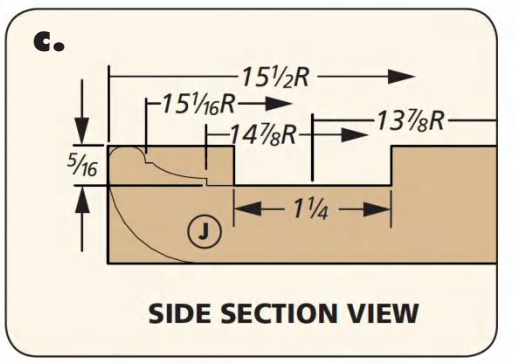


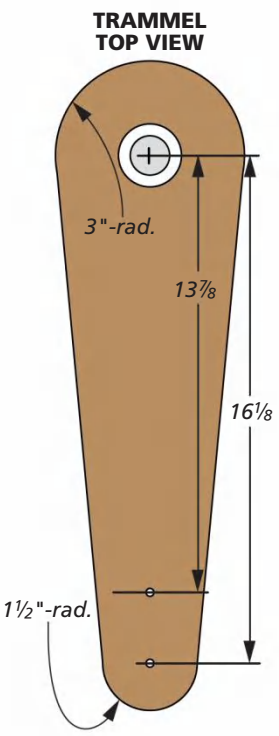


# Carving a TOP

As I mentioned in the beginning, we'll focus on the decoratively trimmed top, the one that has a profile resembling a piecrust. Start by gluing up the boards that make up the top. Then trim the panel square, and draw lines from corner to corner to locate the center of the panel.

**SLICES OF PIE.** Now that you have the center of the panel located, further divide the surface into eight sections, like you see in the main drawing above. The trammel you see in the left margin comes in handy for the next step — routing the outer radius of the top. Combine the trammel with a plunge router, and a 1¼" striaght bit to do this task.

**INNER WALL.** You'll need to use the trammel again for this next step. Here, you're going to come close to the inner wall of the pie crust pattern (detail 'c').

**PATTERN TIME.** The pattern that you see in Figure 1 on the next page is available online at *Woodsmith.com/251*. The center of the pattern aligns to the lines you've previously drawn.

Now you can trace the profile onto the panel. I've found that using a ballpoint pen gives you a line that's easy to see. Then, fill in the radius between the pattern markings with a beam compass.

## SHAPING & CARVING

The box on the next page shows the milestones along the way in creating the piecrust profile. Here, I'm going to expand a little bit where it might be needed.

**SHAPING FIRST.** Your allies in this battle are a quartet of tools — rasps, files, carving tools, and sandpaper (wrapped around a dowel for backing). The carving tools are shown in the photo at left. The others will be used in the steps on the next page, starting with Figure 2. You'll want to keep all of the tools perpendicular to the top as you go through the paces of refining the profile.

Figure 3 brings back the router for the initial shape of the underside. As the detail shows, you're going to extend and soften that chamfer with the trio of tools you used on the outer profile.

**FREEHAND ROUTING.** Figure 4 shows some freehand routing. Sneaking up to the profile of the bead, and creating a ledge where the cove will start is the task at hand. This is where the inked lines pay off in spades.

**THE BASIN.** The router and bit shown in Figure 5 are used to remove the excess wood and create the basin. Don't bring it to a finished surface just yet, trying to protect that while carving is a waste of time.

**CARVING LAST.** The carving tools mentioned earlier come into play now. The three tools earn their keep here on this project.

GO 2 Online Extras

For full-size patterns and jigs, go to:

Woodsmith.com/251

▼ The back bent gouge defines the crook of the bead. The other two help form the top and cove.

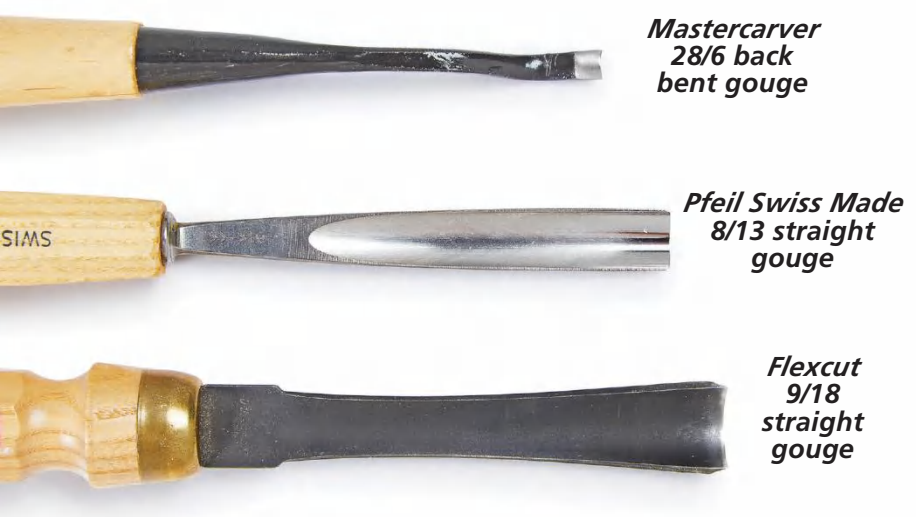

# CREATING THE PIECRUST TOP

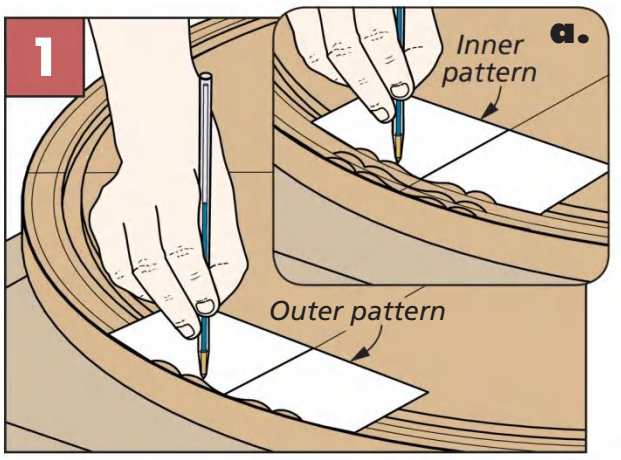


**Pattern Layout.** Trace the outer profile of the pattern. Align the pattern to the centerlines on the top.

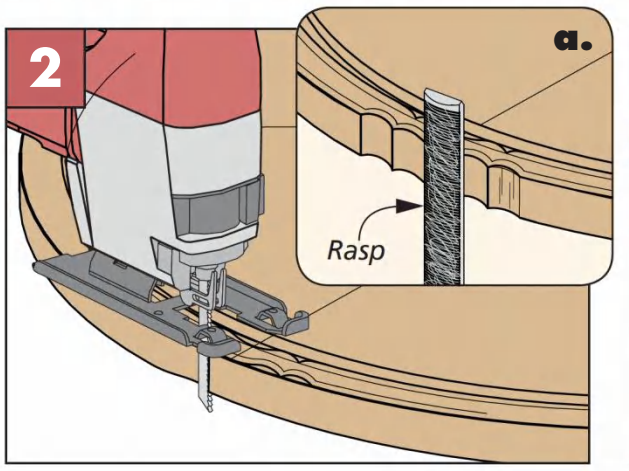


**Shape the Edge.** A jigsaw will remove most of the waste around the edge. Shape the profile with files and rasps.

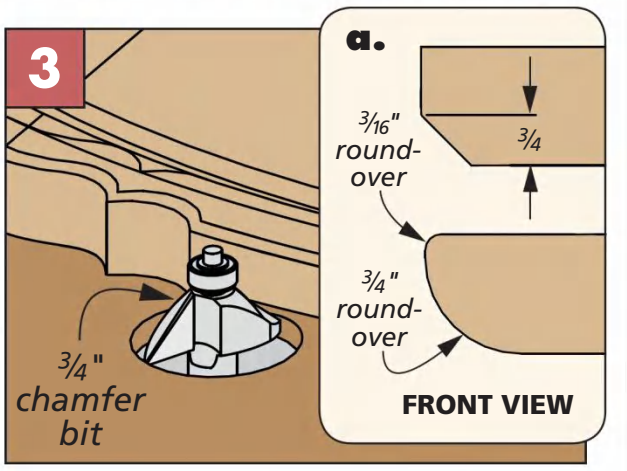


**Round the Edges.** The underside takes several steps. A router bit, followed with rasps, files and sandpaper.

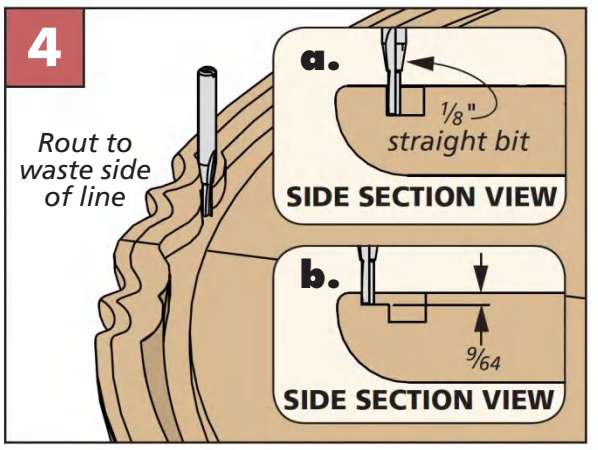


**Inner Edge.** A palm router and straight bit let you nibble away most of the waste on the inside edge.

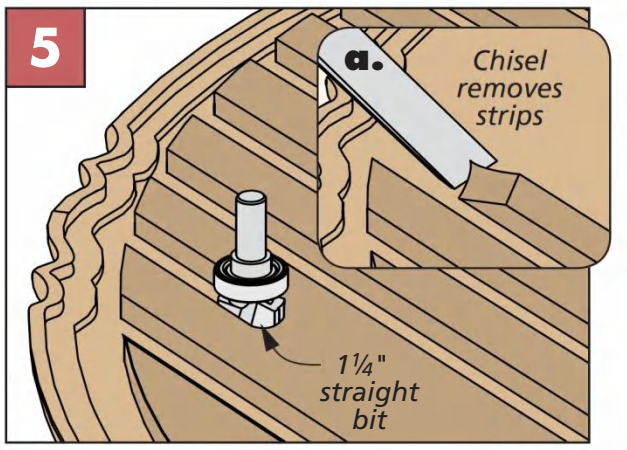


**Rough out the Basin.** A straight bit in the router lets you shape the basin. Clean it up after carving the bead.

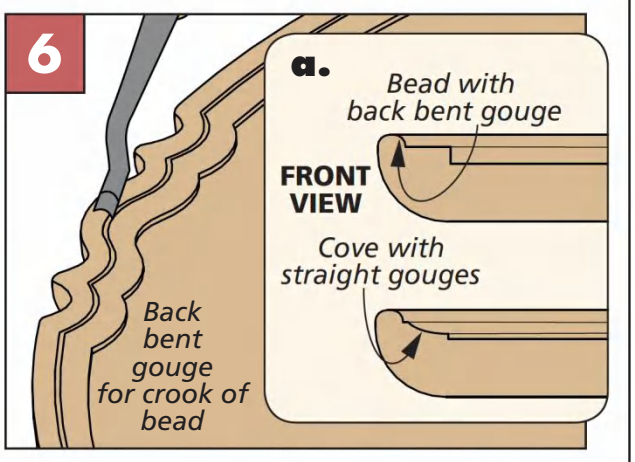


**Carving.** First, carve the crook of the bead, then shape the top. Finish by shaping the cove beneath the bead.

Figure 6 and its detail shows what I'm talking about. First, the crook of the bead is done with a 28/6 back bent gouge. Second, the top of bead is shaped with a 8/13 straight gouge. Third, the wide cove is created with the gouge just mentioned and a 9/18 *Flexcut* straight gouge.

When the carving is done and sanded, you can smooth the basin surface in preparation for finish. Then attach the top to the battens. Installing the hardware completes the work. Install the catch first to locate the strike plate that you'll mortise into the top edge of the birdcage.

All this effort pays off when the stain and finish are dry, and the table is in place. It will look like its been a member of the family for generations. W

## Materials, Supplies & Cutting Diagram

| | | | | | |
|---|---|---|---|---|---|
| A | Post (1) | 3 15/16 x 3 15/16 - 21 7/16 | H | Wedge (1) | 3/8 x 1 1/4 - 4 |
| B | Legs (3) | 1 1/2 x 6 1/2 - 17 | I | Battens (2) | 1 x 1 5/8 - 27 |
| C | Spindles (4) | 1 1/4 x 1 1/4 - 5 | J | Top (1) | 15/16 x 31 - 31 |
| D | Top Plate (1) | 1 x 8 - 8 | • | (6) #8 x 2" Fh Woodscrews | |
| E | Pins (2) | 3/4 dia, x 2 dowel | • | (4) #8 x 1 1/8" Fh Woodscrews | |
| F | Bottom Plate (1) | 1 x 8 - 8 | • | (1) Catch | |
| G | Washer (1) | 5/8 x 3 1/4 - 3 1/4 | | | |

*1" x 6" - 72 " Mahogany (Two Boards @ 3.8 Bd. Ft. Each)*

*1" x 6" - 96" Mahogany (Two Boards @ 5.0 Bd. Ft. Each)*

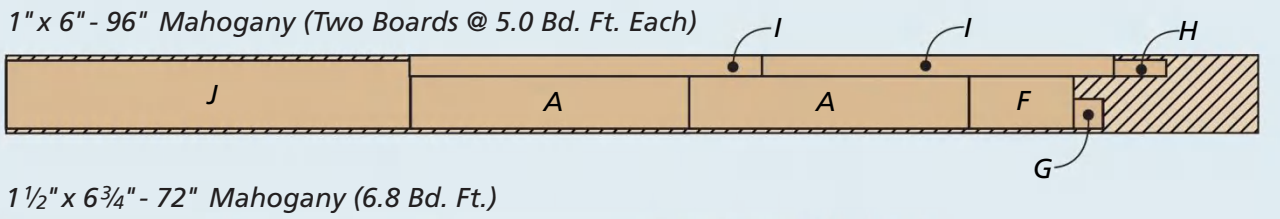


*1 1/2" x 6 3/4" - 72" Mahogany (6.8 Bd. Ft.)*

Written and Designed by: Logan Wittmer

# Miter Plane

This English miter plane is a nod and a tribute to the work of English plane maker Bill Carter.

The secret to why an English miter plane works so well is the tight mouth. With the blade fully extended, there's just barely enough room for a whispy shaving to pass.

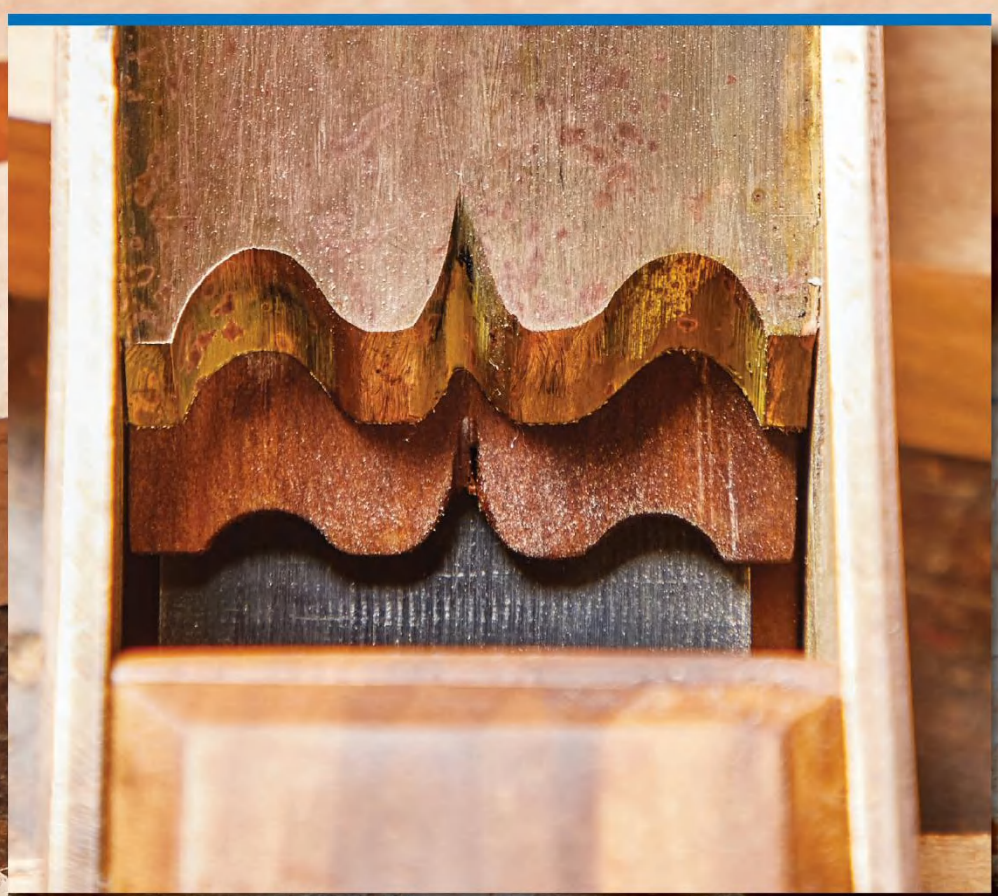

Bill Carter has been known for his use of the decorative detail called a Cupid's bow. Bill often uses it on the bridge, as shown here, as well as in other parts of the plane — even around the dovetails on the sole.

A number of years ago, I came upon the work of a plane maker, Bill Carter. Bill has been making handplanes based on traditional English planes for the better part of four decades. Every plane he makes is built by hand and is created in his garden shed.

**MINI PLANES.** Now, I have a bit of a confession. Unbeknownst to my wife, I started stashing away money so that I could buy one of Bill's little planes. So, a few years ago I purchased one of Bill's miniature boxwood smoothers. And what a plane it is. The workmanship is unreal.

Unfortunately, that boxwood smoother made me long for one of Bill's signature miniature miter planes, but they carry a robust price tag (worth the price, in my opinion). However, Bill, being the gentleman he is, has posted videos of his entire plane-making process on his website (see page 49). So, I decided to try my hand at building a couple and you can see the results here.

**ENGLISH MITER PLANE.** If you've never seen an English miter plane before, you'll notice a few things about it. First, the bed angle is low — usually between 17°-25°. Second, it's a fine-tuning plane and takes a thin shaving — really excelling on hard, dense woods and end grain. And while they can be wood-bodied, most are metal. So, turn the page as I walk you through an overview of Bill's process for making one of these little beauties.

Illustrator: Dirk Ver Steeg

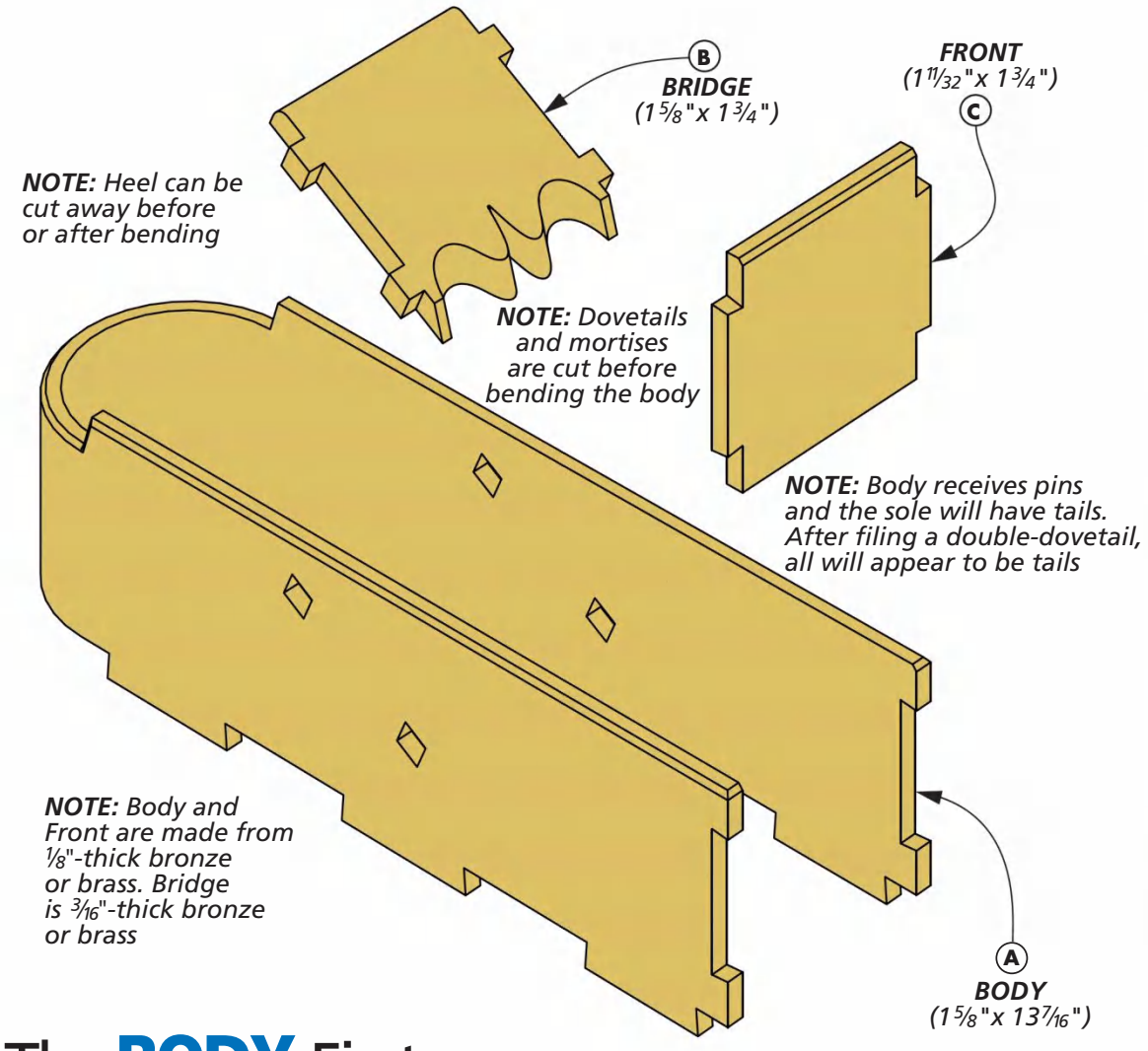


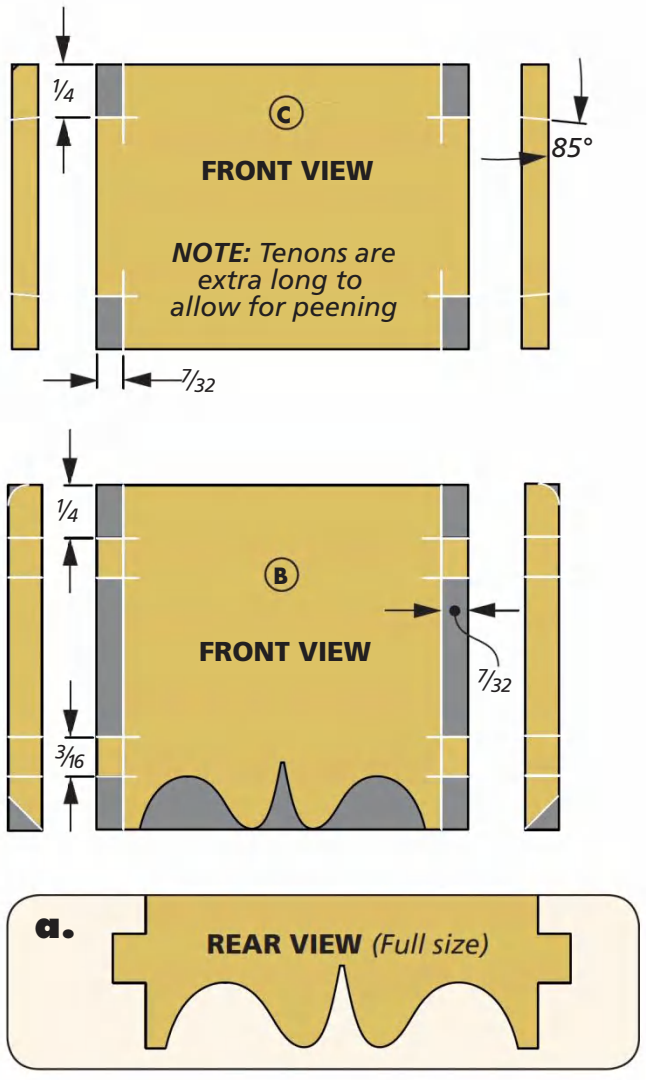


# The BODY First

For this plane, I chose to use one of Bill's favorite materials — bronze. Bronze peens and bends beautifully, but it's a little tougher to cut than brass. I would suggest making your first one out of brass before tackling the more difficult bronze.

**A CURVED BODY.** As you can see in the drawing above, the plane body is one piece of metal with a dovetailed front and a bridge attached to the sides with mortises and tenons.

Start with a piece of flat stock and use the dimensions below to lay out the pins and bed angle on the body. Make sure to scribe these fairly hard so you can see them. I used a black marker to color the bronze so the layout lines were easily visible.

With that done, you can follow the steps on the next page to cut the dovetails. In short, position the side in a machinist vise with the layout line flush with the jaws. This will act like a stop for filing and sawing. Cut the dovetails using a hacksaw with a fine-tooth blade (32tpi).

To remove the area between the tails, make vertical kerfs leaving about 1/16" of waste. Then, use a cold chisel to work the metal back and forth until it breaks free. With all the waste gone, file to the jaws and baseline. Cut all of the dovetails along the bottom edge and the front of the body. As a side note, it's better to have extra length on the dovetails for peening, rather than too short and not having enough material.

**BRIDGE.** The bridge is up next. This holds the wedge against the blade. Start by cutting the blank to size and cutting the tenons

GO 2 Online Extras

For a video on creating the cupid's bow, go to: Woodsmith.com/251

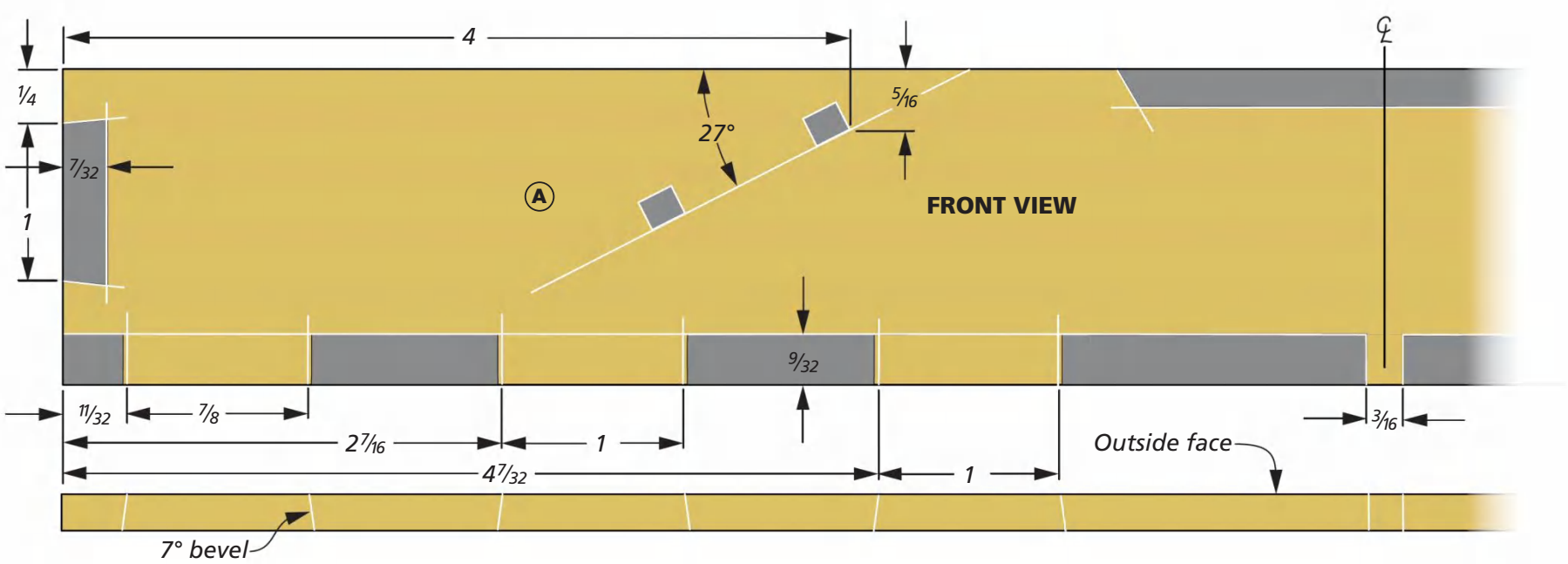

on the edge the same way you did the dovetails. Transfer the tenon locations to the body of the plane and drill pilot holes to form the mortises. Then, using a needle file, file the holes square.

**CUPID'S BOW.** The decorative Cupid's bow on the front edge has become Bill's trademark. He's included them all over on planes, and has gone as far as to even add it onto the edges of some of his dovetails. For a video on creating this elegant detail, visit *woodsmith.com/251*.

**BEND THE BODY.** Now, you can bend the body. Create a wood blank to use as a bending form. Pinch the body in your machinist vise, as seen in Figure 6. Make sure everything's straight and aligned here. Bend the body around the form. There will be some spring back, so I found that removing the form and over bending it a little helped. Check to see if the faces are still coplanar (details 6a and 6b) and twist it to correct any variance.

Finally, spread the body slightly and insert the bridge into the mortises. The final portion of the body to cut is the front and transfer the front dovetail to it. Cut the shoulder first, then the cheek and file down to the baseline. Make sure that the inside dimension of the front and the bridge are the same.

## MAKING A BODY

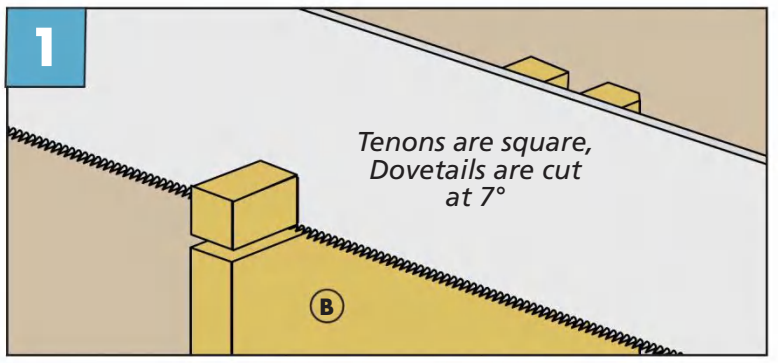


**Cut Dovetails.** Use a fine-tooth blade to cut the dovetails. Stay just shy of your layout line, and make a series of vertical cuts in the waste section.

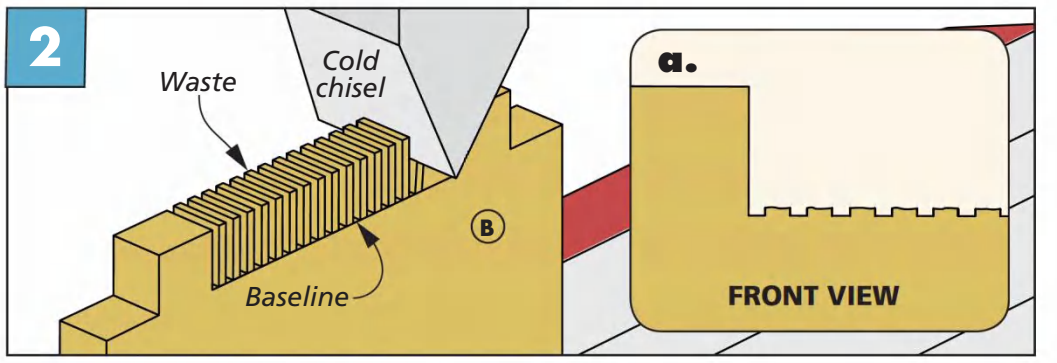


**Punch the Waste.** Use a cold chisel or pin punch to work the waste left and right until you can punch it out from the body. Brass will break cleanly, but bronze will be a little "stickier."

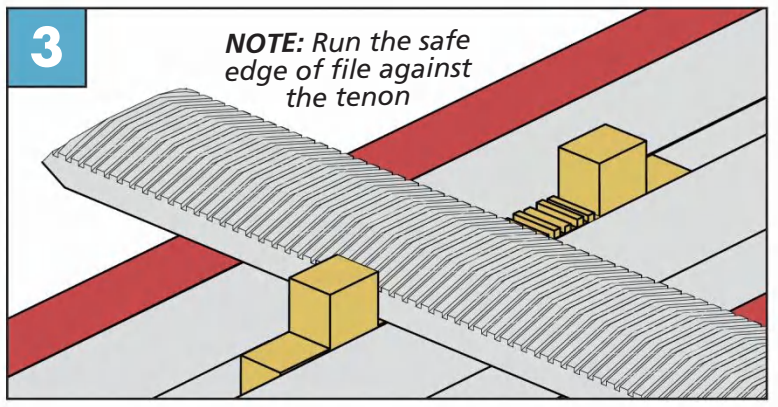


**To the Baseline.** Align the baseline with the jaws on your vise and file down the ridges left from the waste until you've just touched the line.

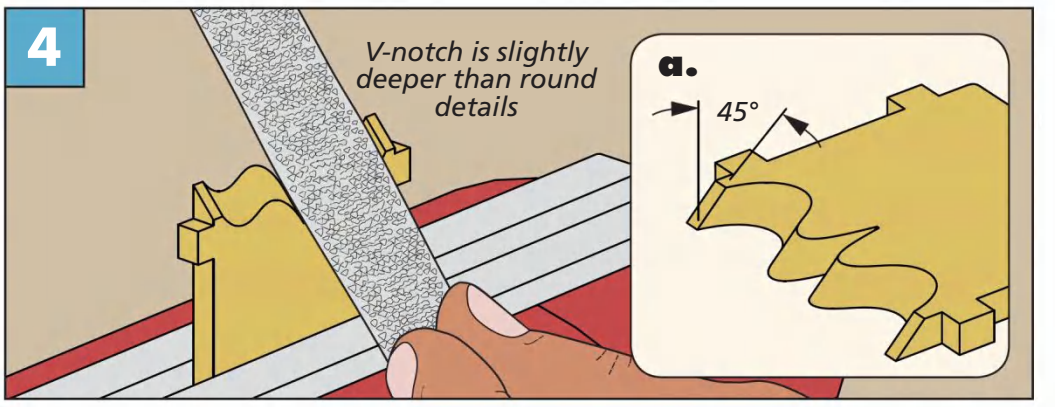


**Cupid's Bow.** File the front of the bridge to 45°. Then, use a triangle file to cut the center of the Cupid's bow. Next, use a rat tail file to create the curved detail before blending the shape together.

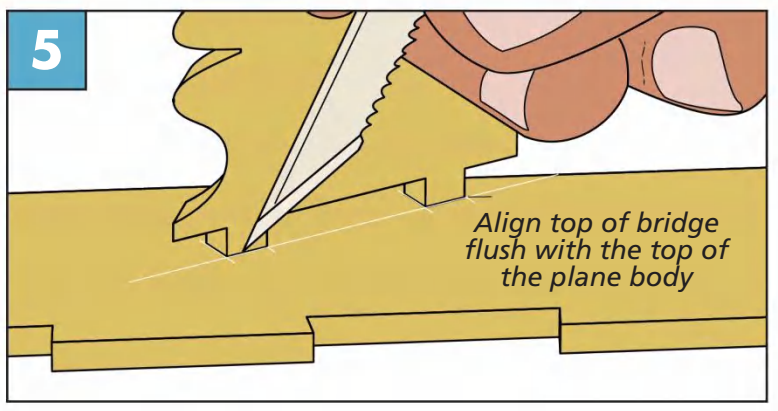


**Transfer Mortises.** Use the tenons on the bridge to mark the mortise locations, then drill them out and use a tiny file to create the square mortise.

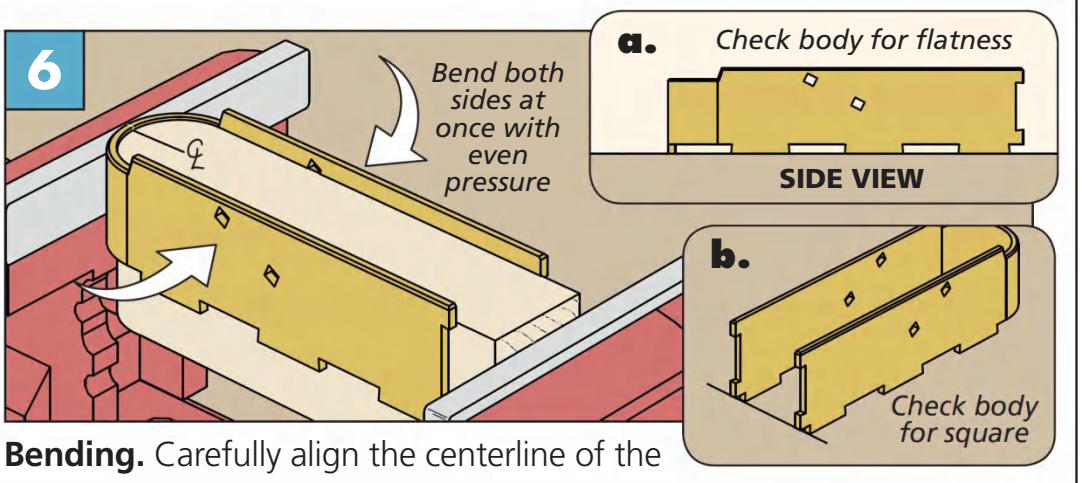


**Bending.** Carefully align the centerline of the body with a centerline on the die and clamp it in place. Then, bend both sides of the plane until they're parallel to each other.

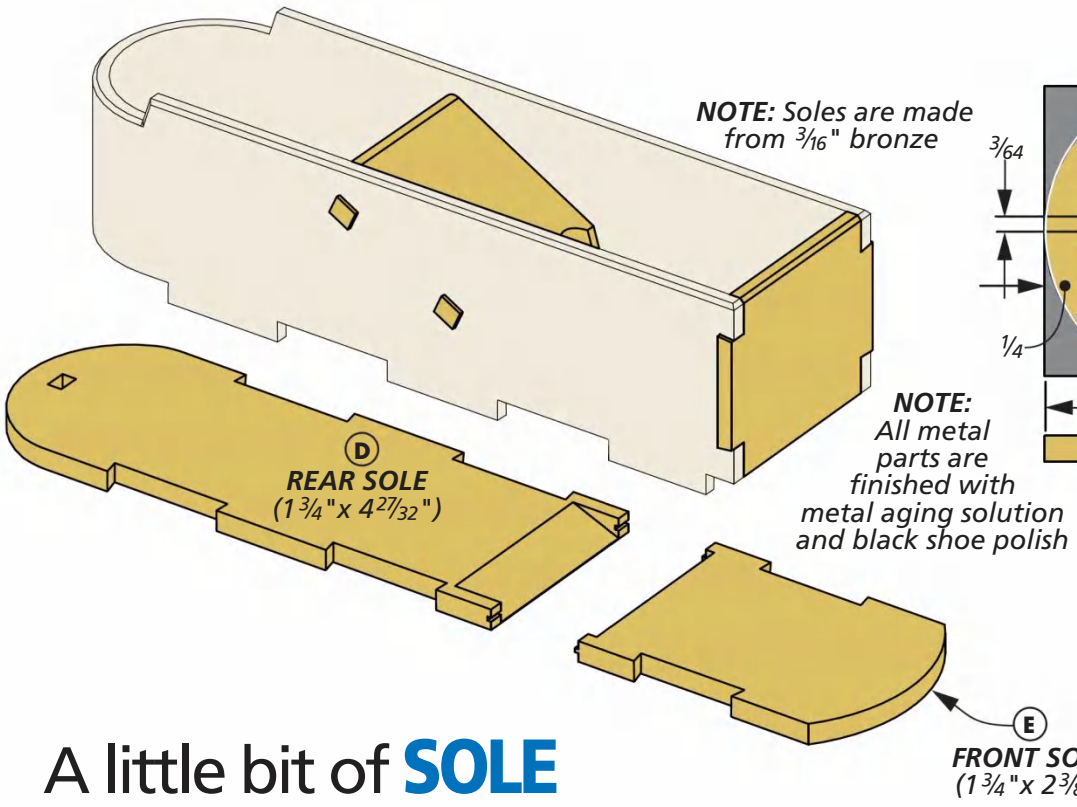


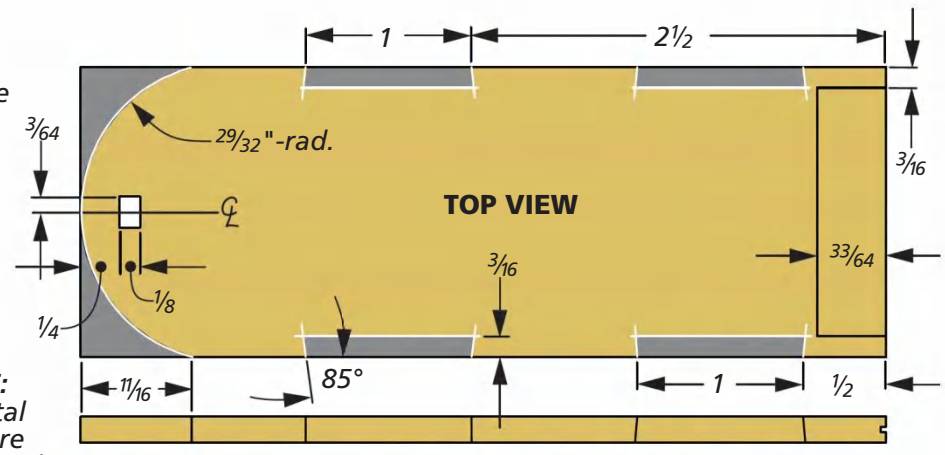


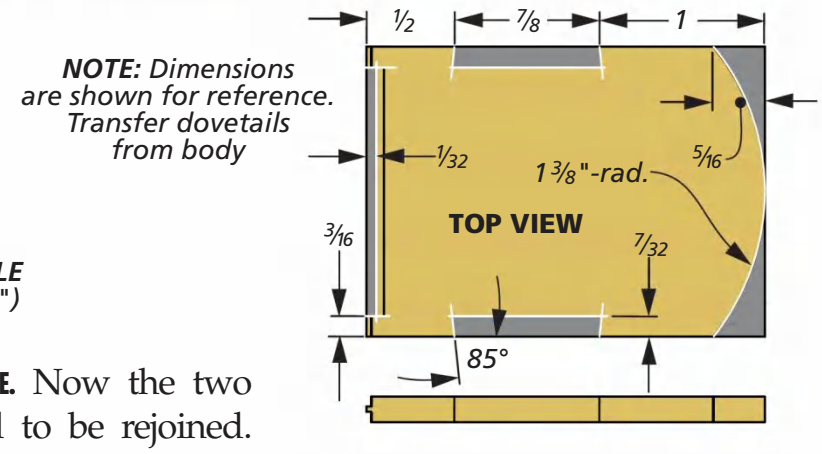


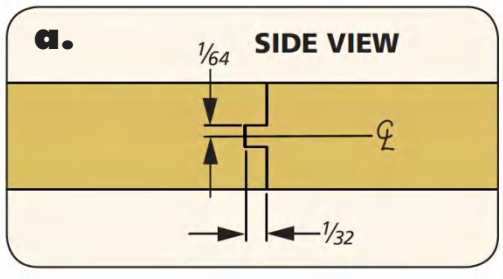


# A little bit of **SOLE**

In my experience, the sole is the most important part of the plane. It sets the mouth of the plane and ultimately how well the plane will work. This plane has a slightly thicker sole, and it's made in two parts.

**CUT IT IN TWO.** The sole starts by cutting a piece of stock to length and then cutting the front and rear part of the sole apart. Use a file to square up the cut ends. Then, you'll lay out the angled bed of the plane. Set the sole at an angle in your vise and make small kerf cuts like before. Then, punch away the waste and file it smooth, as you see in Figure 1. The bed tapers to almost a feather edge, but it's left slightly blunt to help keep it strong.

**TONGUE & GROOVE.** Now the two sole parts need to be rejoined. This is done with a tongue and groove. Lay out the position of the tongue and groove. Then, cut the groove in the rear sole using a hack saw. The groove is the width of the hacksaw blade.

With the groove cut, position the front sole in the vise. Cut the tongue by laying the hacksaw horizontal on the vise jaw and cutting the shoulders away, forming a tongue. Test the fit of the two halves. The tongue and groove should seat together fully. You can use a thin file to fine-tune the groove and the tongue until they fit together nicely.

**THE MOUTH.** Once the front and the rear sole click together, you can form the mouth. This is done by filing away a portion of the front sole at a slight angle (Figure 2 below). The goal here is to leave a thin, tight mouth that leaves just enough room for the blade and a shaving.

**DOVETAILS AGAIN.** At this point, you can transfer the dovetails from the body to the sole and cut them (Figure 3). Again, file

## MAKING A BODY

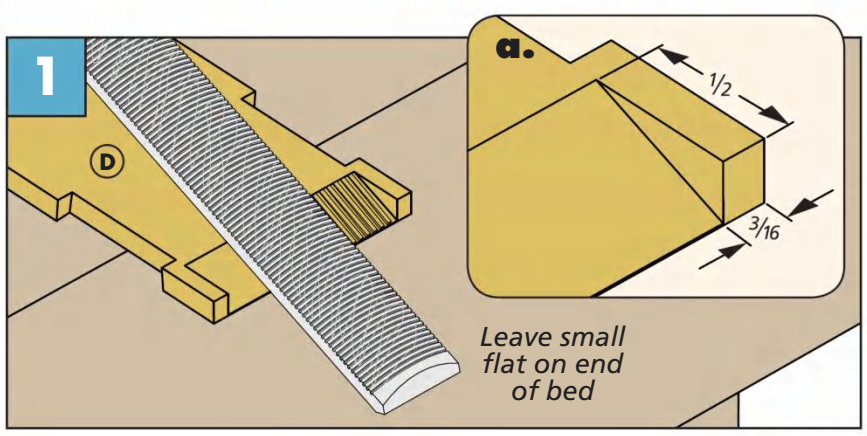


**File the Bed.** File the bed on the sole down to a 20° angle, taking care to not widen the bed past the dovetails.

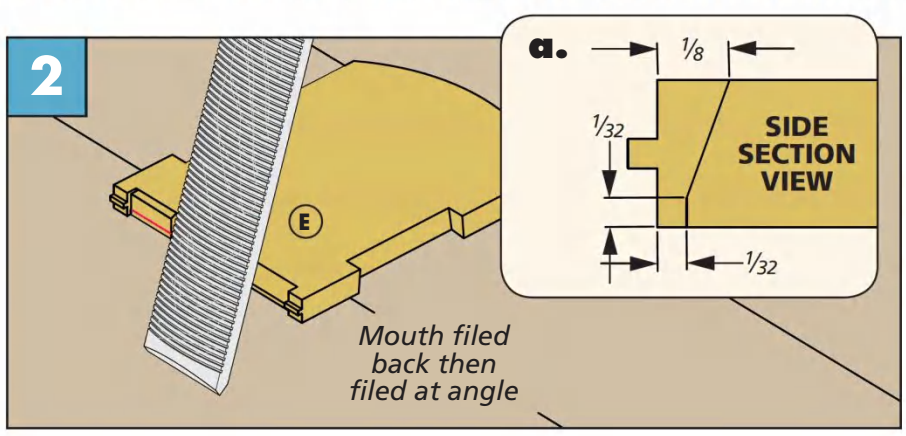


**Front Mouth.** Use a file to create a bevel on the front sole, and file away a small amount of material to form a narrow mouth.

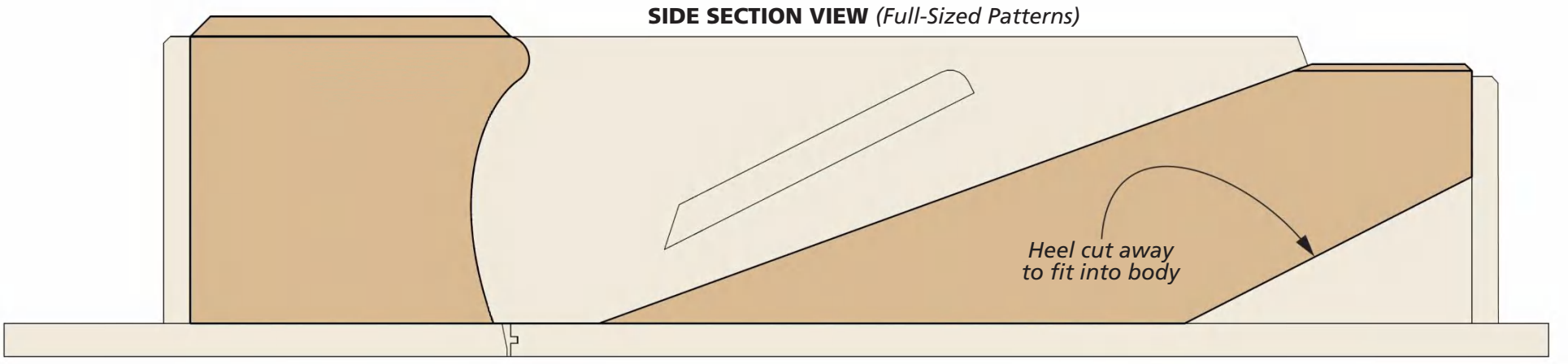


down to the baseline and test the fit. You want the sole to drop into place on the upside down body. There is also a mortise to cut on the rear of the sole.

Take some time with a triangle file and create a slight flare on each dovetail opening (Figure 3). This "double-dovetail" creates a wedge shape that keeps the metal locked together after peening.

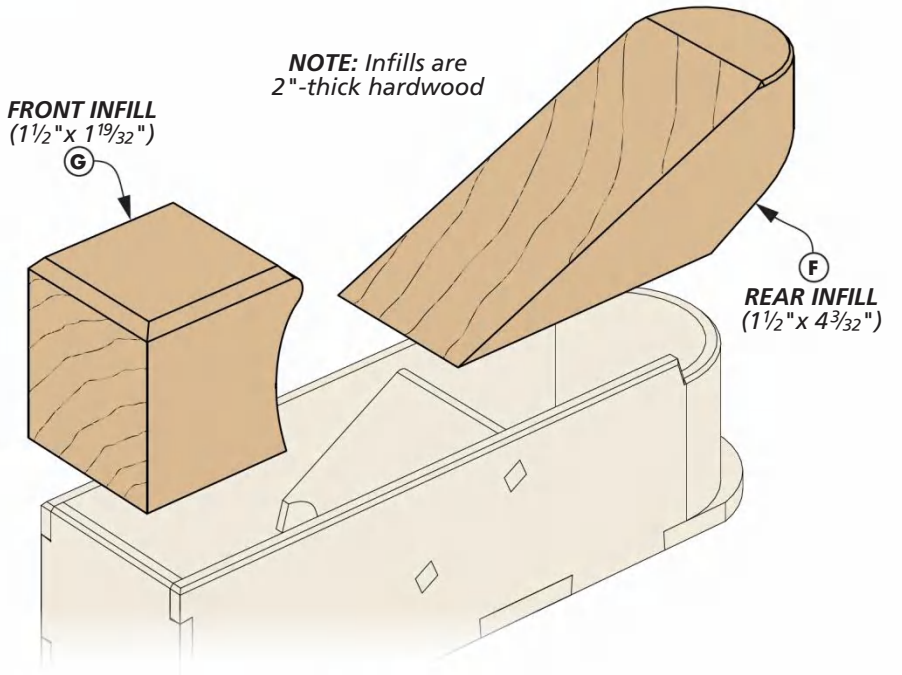


## THE INFILLS

Before you peen anything, you'll want to lay out the infills. The rear infill is the blade bed and aligns with the angled bed on the sole. The front directs shavings out of the plane (as well as provides a resting spot for your hand).

**REAR INFILL.** Transfer the rear infill shape to your stock by tracing the inside of the body. In the spirit of Mr. Carter, I cut this with a coping saw. To flatten and smooth the bed on the rear infill, I used a rasp and my jack plane.

**FRONT INFILL.** The front infill is a little trickier — you're looking for the curve to land right in front of the mouth (see drawing above). The shape is traditionally what's found on English miter planes. Again, I cut this with a coping saw, and used my dovetail saw to create the small shoulder on the top. To smooth everything out and refine the edge, I used Bill's blunt chisel trick (more on that later). Once the infills look good, you can get out your ball-peen hammer.

**HAMMER TIME.** The peening is straightforward. Start by peening the dovetails around the mouth — aim your blows to force the two sole pieces together. Then, work around the remainder of the dovetails. Don't forget the front dovetail and bridge tenons as well. After everything's peened, file the mushroomed metal away. Then, sand the entire body and sole to 220-grit.

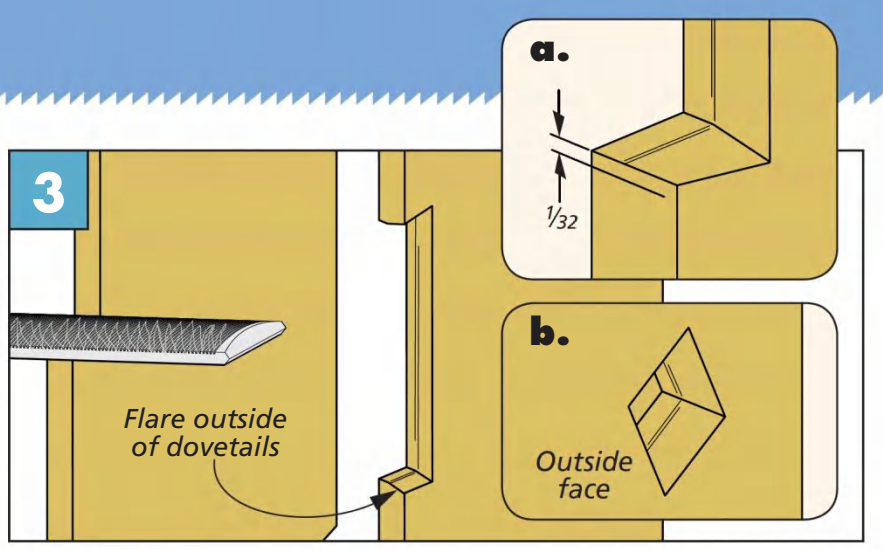


**Double Dovetails.** Remove the outside corner of each dovetail and mortise to allow the material room to expand.

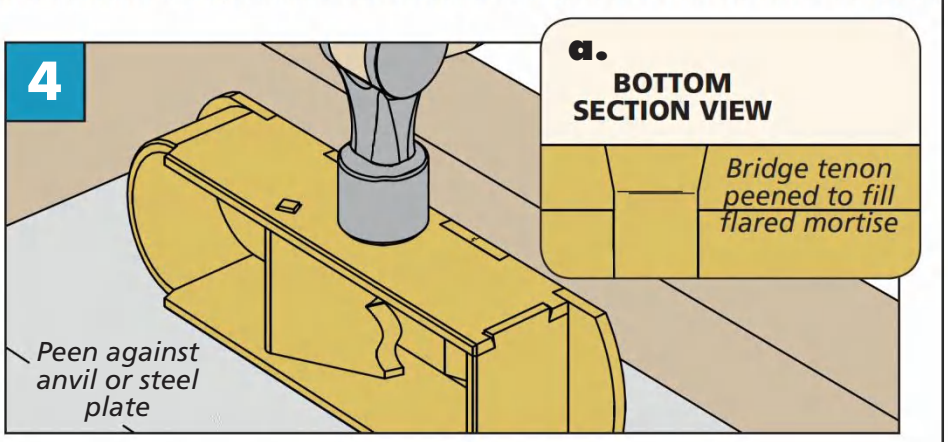


**Peening.** Peen the dovetails and tenons. Then, file some of the mushroomed metal away and peen again as necessary.

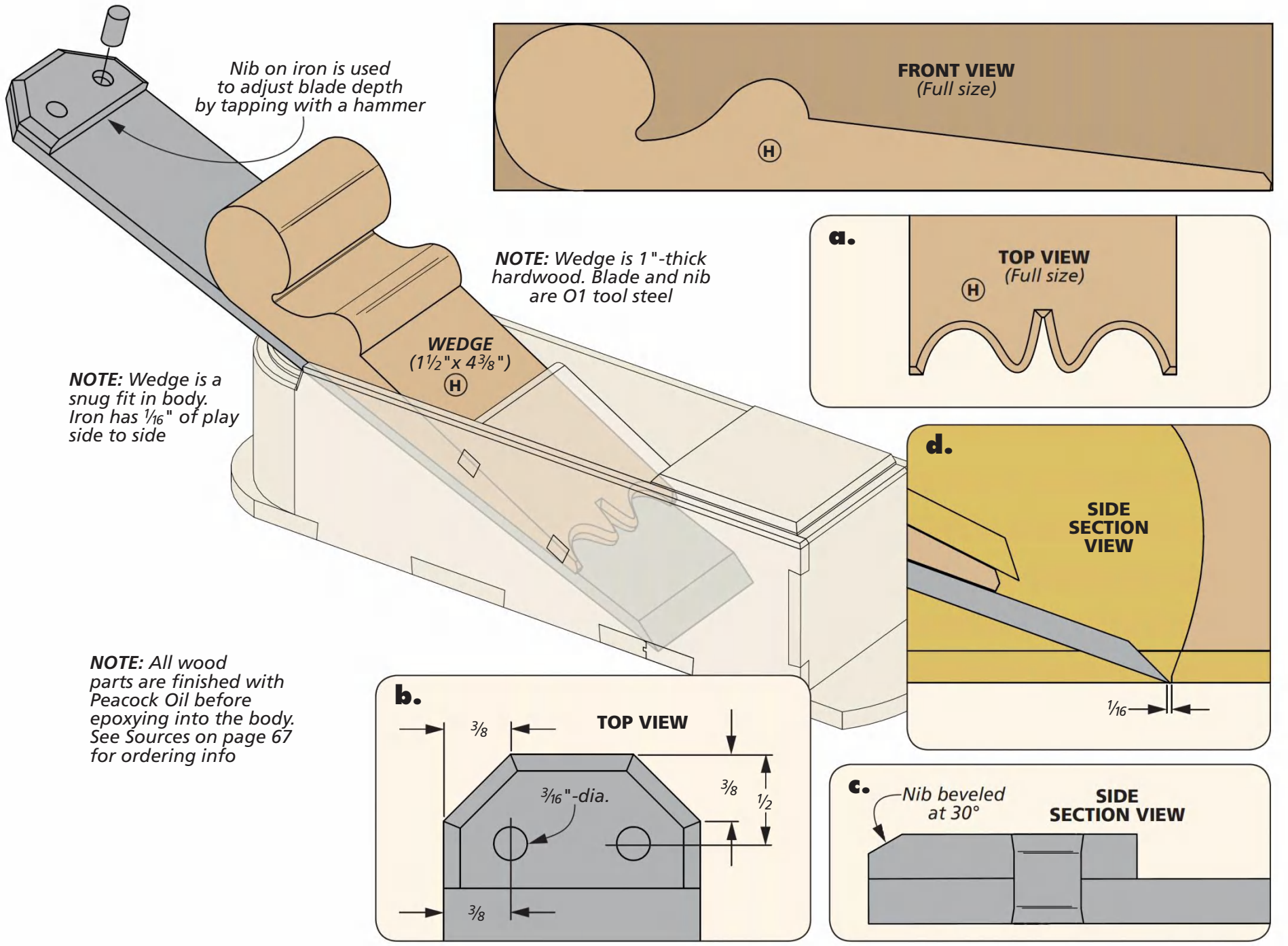


# The BLADE & WEDGE

One of the (many) interesting things that Bill does is use vintage laminated irons in his planes. Here in the USA, those are harder to come by. So, I decided to make my blade. The style I chose is a traditional design with a nib on the back for making blade adjustments with a hammer.

**O1 TOOL STEEL.** The blade is made from O1 tool steel and is cut to length with a bevel ground on one end. To harden the bevel, heat it to red-hot with a torch (as soon as a magnet doesn't stick to it, you're at the right temperature) and quench it in oil. An hour in a 450° oven tempers it.

Adding the nib is straightforward. Cut a second piece of O1 and clamp it to the blade. Then, drill two holes for steel pins and chamfer the holes. Peen the steel pins in place and then file the pins flat. I ground the rear of the blade into a half-octagon shape and beveled the edge — just to soften the look and feel. I finished the blade with a little gun bluing.

**NOW THE WEDGE.** The wedge is the final thing to knock out. This is cut from (usually) the same hardwood as the infills. The shaping is done with a coping saw, but final smoothing is done with a blunt chisel. Yes, really. It's a tip that I picked up from one of Bill's videos, and I have a video of it on *woodsmith.com/251*. Try it out, and you'll be amazed.

When working on the wedge, you want it tight. This might be the most tedious part — cutting, sanding, filing, checking, and re-sanding and filing the wedge until it's the proper fit. You want it snug side-to-side, and able to lock the blade in position.

**TUNE IT UP.** Now with the plane assembled, it's time to tune it and get it working. Start by flattening the sole on some sandpaper. Next, remove the blade and wedge and sight down the bed. You should be able to see light through the mouth. If you can't, remove the high spots. Then, as a last check, see if the blade is coming through the mouth. If it isn't, open the mouth up slightly. You want this to be as tight as possible while still letting the blade and shaving to come through.

GO 2 Online Extras

For details on making the blade and the blunt chisel go to: Woodsmith.com/250

**FINAL THOUGHTS.** As I reach the end of this project, I know there's a thousand tips, tricks, and techniques that I picked up from Bill that helped me building these planes. But I'm simply out of space to include all of them.

However, if you're wanting to build one of these beautiful little planes, the absolute best piece of advice I can give you is to go to Bill's website (listed below) and his YouTube channel. Watch all of his videos. Between him and his wife Sarah, they've filmed the entire process of building of a plane from the design to the final finishing.

I would dare to say that Bill has more planemaking knowledge than anyone alive, and much more than I could pack into an entire year of *Woodsmith*. If you do go watch and learn from Bill, as I have, I'm certain he'll quite quickly become your favorite plane maker. W

## Materials & Supplies

| | | |
|---|---|---|
| **A** | Body (1) | 1/8 bronze x 1 5/8 - 13 7/16 |
| **B** | Bridge (1) | 3/16 bronze x 1 5/8 - 1 3/4 |
| **C** | Front (1) | 1/8 bronze x 1 11/32 - 1 3/4 |
| **D** | Rear Sole (1) | 3/16 bronze x 1 3/4 - 4 27/32 |
| **E** | Front Sole (1) | 3/16 bronze x 1 3/4 - 2 3/8 |
| **F** | Rear Infill (1) | 2 - 1 1/2 4 3/32 |
| **G** | Front Infill (1) | 2 - 1 1/2 x 1 19/32 |
| **H** | Wedge (1) | 1 - 1 1/2 x 4 3/8 |

- (1) 1/8 x 1 1/2 x 12" O1 tool steel
- (2) 1/8-dia. x 1/2 steel pins

*Note: Total amount of metal needed is 10" of 3/16"-thick stock and 16" of 1/8"-thick stock

Bill served his apprenticeship as a carpenter and joiner. After making his first plane in the 1970s, he stepped into full-time planemaking in 1987. By his estimation, he's made over 1,000 and still going strong. During the summer months, Bill can still be found making planes in his garden shed.

**MINIATURE PLANES.** Some of Bill's first metal planes were miniature miter planes made from the brass back of rusted tenon saws. Since then, Bill has made metal and wood-bodied planes ranging from full sized jointers (as seen below) to miniature, 1"-long wooden smoothers.

**AGED PLANES.** One of the many notable things about Bill's planes is his aging technique. Being an avid tool collector, Bill likes to age his planes using various techniques to give them a vintage feel. This often includes multiple maker mark stamps, chemical aging, and general patina work. To learn more about Bill's process and to view his past and present work, visit his website:

*Billcarterwoodworkingplanemaker.co.uk*

▲ Most of Bill's planes make liberal use of the decorative Cupid's bow. Here, you can see it along the top edge of the plane, as well as the dovetailed sole.

▼ Bill has built a handful of jointers, including this bronze and elm burr jointer. A special thanks to Bill and Sarah Carter for supplying photos.

▲ As an avid collector of vintage tools, Bill often takes design cues from vintage tool makers. He also will restore vintage planes with new parts, such as this lovely boxwood stuffed bronze plane.

▲ Shaker pegs with a clear finish add to the style but more importantly serve the practical purpose of holding sanding belts or sandpaper rolls.

▲ A row of five drawers makes it easy to organize 5" sanding discs in a range of grits. The drawers keep the hook and loop backing dust-free.



Written by: Phil Huber; Project Design: Dillon Baker

# Sander Station

In an easy weekend, you can build an attractive storage solution for all your power sanding gear.

▲ Insetting an adhesive-backed cork liner on the top creates a cushioned landing zone for your power sanders to avoid marring the paint on the shelf. It also makes a nice visual contrast.

Illustrations: Bob Zimmerman

A place for everything, and everything in its place." This classic Benjamin Franklin proverb offers an alternative to the comfortable chaos that reigns in many workshops — including my own. This pithy saying has a lot to do with this project. One of the goals I have for my shop is to organize tools and supplies so they're not only contained but also that the shop space is inviting.

Let's look at the organizing part first. This compact wall shelf is designed to keep power sanders and associated gear all in one place. Power sanders tend to be dusty tools, so an open shelf works better than a box or enclosed space.

The shelf accommodates both random orbit and belt sanders along with a sanding block or two. It has a cork lining that resists abrasion from sanding discs. Below the shelf is a row of shallow drawers to hold all the discs you could need. Up above, there's a rail with pegs for hanging sanding belts, or even rolls of adhesive-backed sandpaper.

After a recent shop cart project, designer Dillon Baker has been on a bit of a Shaker kick. You can see the inspiration here: pegs and knobs, curved sides, and back rail. Even the paint color recalls the Shakers. To simplify construction, all the parts are made from ½" plywood. Thinner plywood lightens the look of the shelf. This also keeps the overall project cost down, too. Organization, thriftiness, and a simple design, I think Ben would approve.

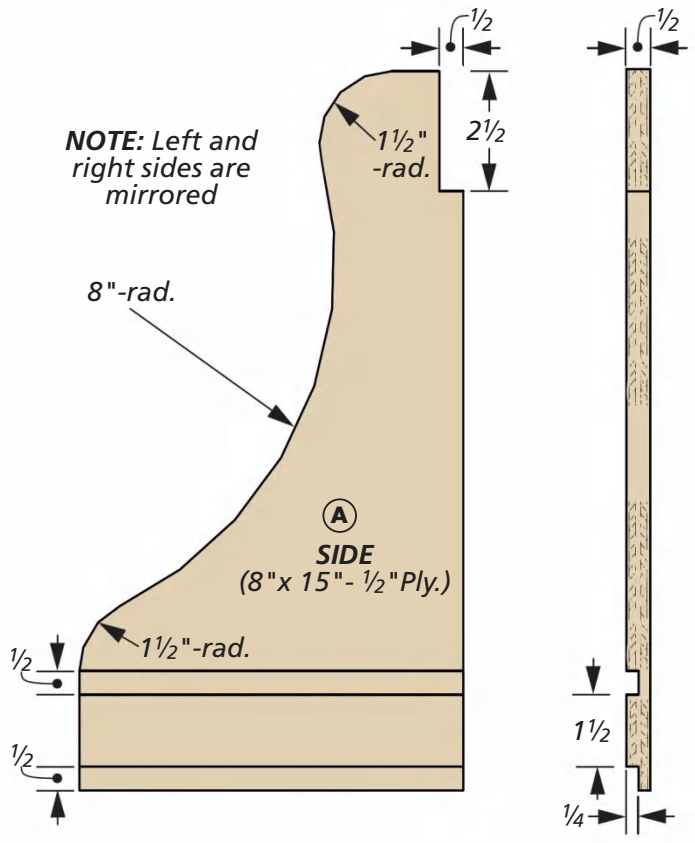


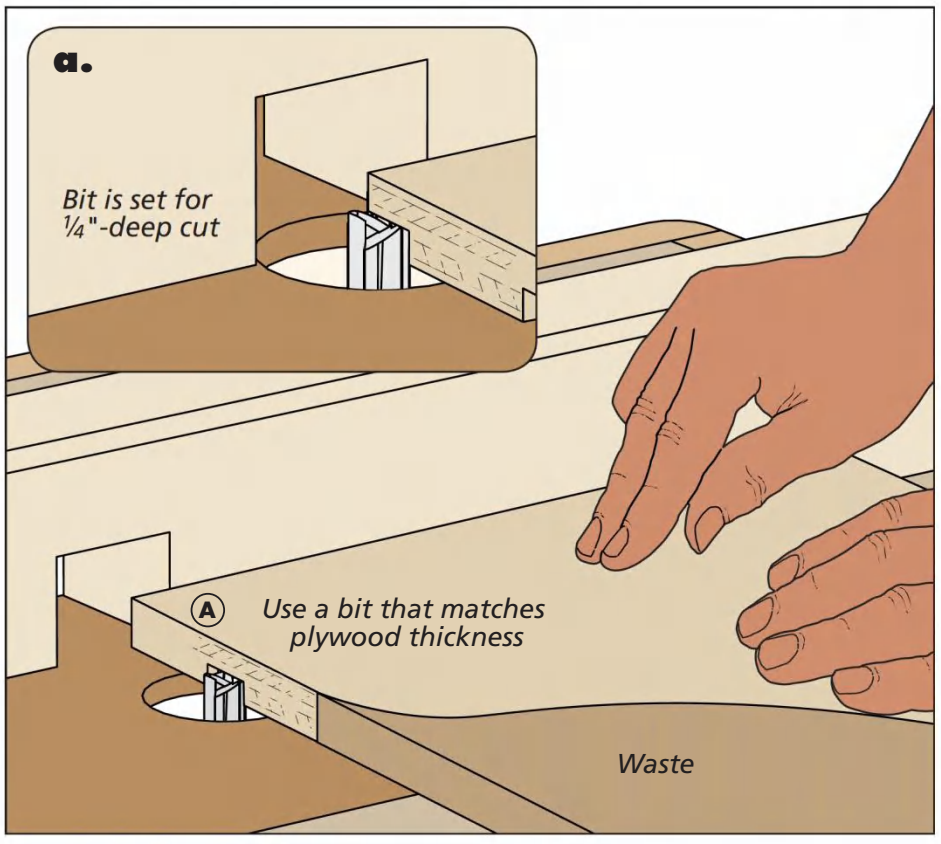


# Curved plywood **SIDES**

This shelf shares a lot of construction similarities with a more typical wall cabinet: two sides joined with a top and bottom. This is all pretty familiar terrain from a woodworking perspective. All the parts anchor into the sides. So that's where we'll begin the construction process.

**JOINERY FIRST.** The drawing above shows the final condition of the sides, including the curved profile. However, it's a good idea to form the joinery details while the sides are still square plywood pieces. This approach preserves long, square reference edges for use with either a router table or table saw.

A rabbet on the lower edge accepts the bottom of the shelf. A short distance up, a dado holds the top. It's personal preference, but I prefer to tackle joinery like this at the router table with a straight bit, as shown in the drawing and detail above.

The one caution is making sure the width of the bit closely matches the thickness of the plywood. Plywood usually measures a little less than its stated thickness. I have a set of bits that are slightly undersized and this does the trick. It's always a good idea to measure the plywood before getting started.

The dado and rabbet are shallow enough to cut in a single pass. If you hold a backer board against the trailing edge of the workpiece, you can minimize tearout. The result is a flat, crisp dado and rabbet ready to accept the mating parts.

One final note. The sides are mirror images. So label the parts to create a left and right side.

**HAND CUT NOTCH.** Along the back edge of the sides, you can see a notch that serves as a mounting point for the hanging rail. For a detail like this, I like to lay out the lines with pencil and make two cuts with a hand saw. Yup — even in plywood. If that isn't

## CUTTING OUT THE SIDES

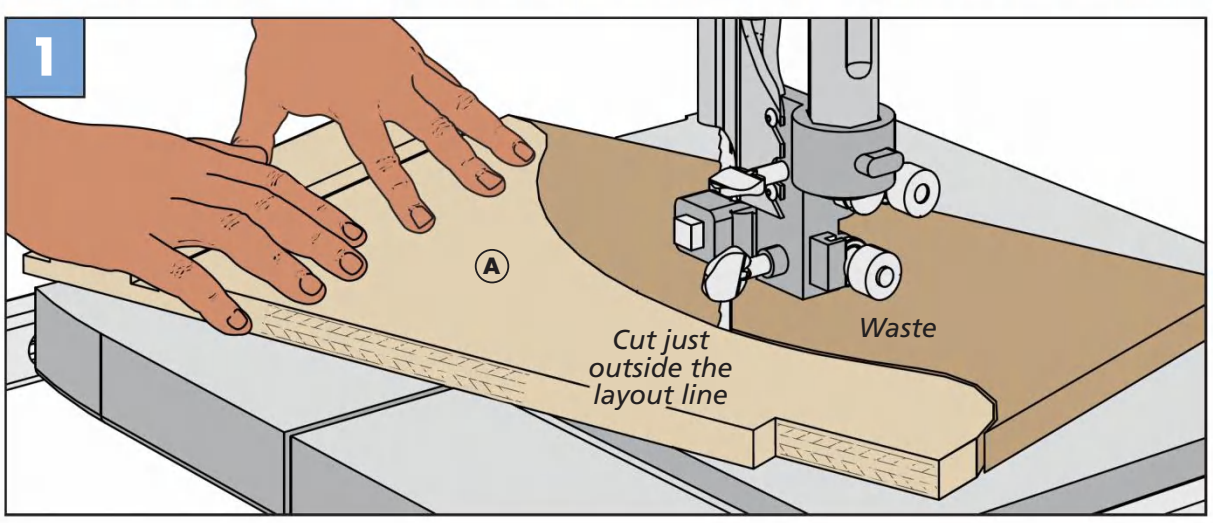


**Cut the Profile.** Although a band saw efficiently cuts curves, you still have blade marks to remove — as well as any errant wandering. So I like to cut on the waste side of the layout line. Then you can use the line as a guide while smoothing.

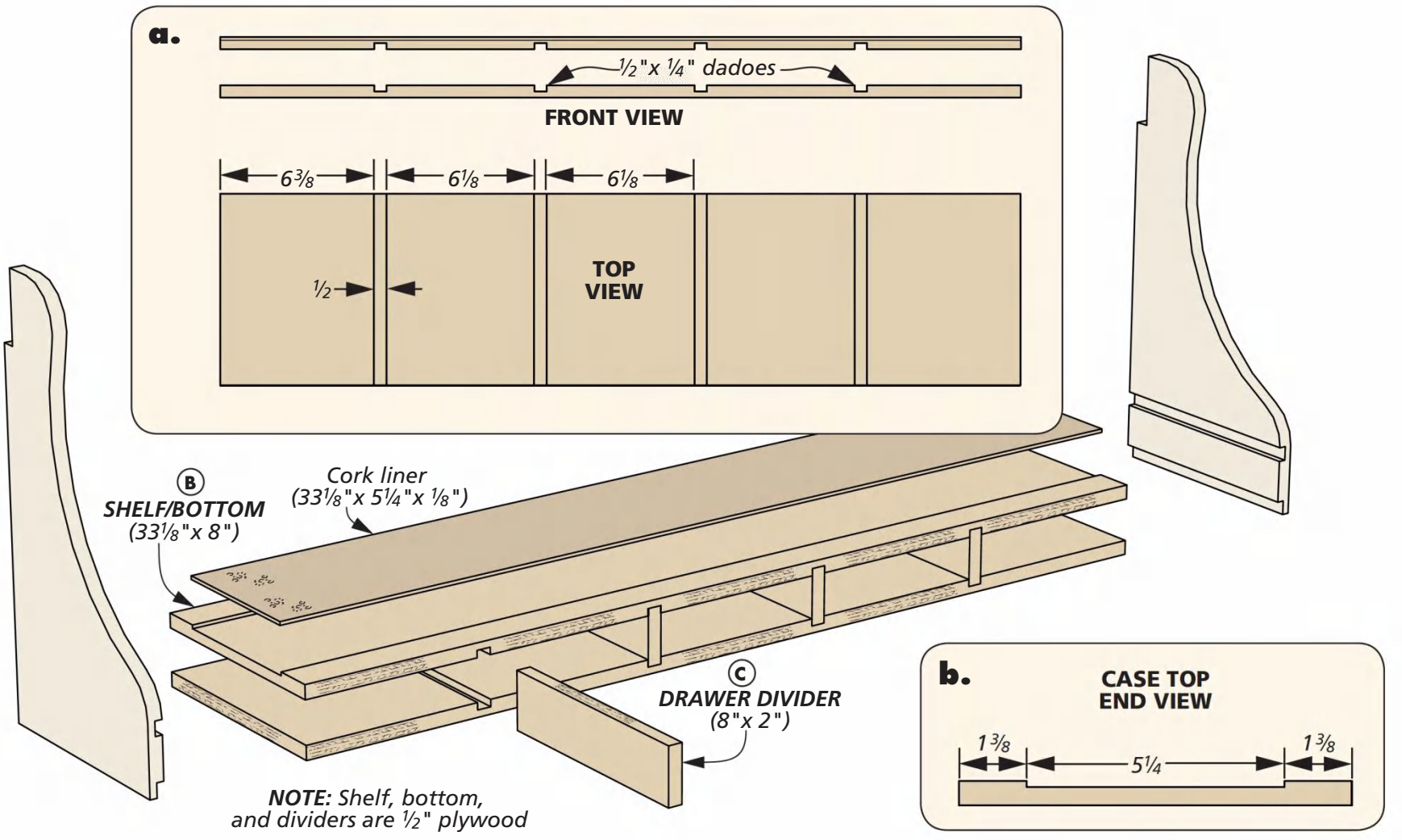


your style, a band saw or jigsaw work well, too. Clamp the two sides together in order to make the cuts at the same time and to ensure consistency.

**MAKE IT PRETTY.** At last, it's time to lay out and cut the profile on the sides. I use a band saw for this kind of task, as you can see in the box on the bottom of the previous page.

After cutting, I attach the sides to each other with double-sided tape. Then fair the curves with files and sandpaper so that they match each other.

## BOTTOM & SHELF

The long shelf and bottom are the next items on the list to make. Nothing too difficult here. The parts are cut to identical size, as shown in the drawing above. A series of dadoes are cut in the lower face of the shelf and the upper face of the bottom. These hold dividers for the drawers, as you can see in detail 'a.'

Creating the dadoes is familiar. The important part is spacing the dadoes evenly. In addition to appearance, taking care to space the dadoes accurately means that the drawers will all be the same size. And that can prevent headaches down the road.

**CORK PAD.** The shelf requires one other detail — a cork pad inlaid in the shelf (detail 'b'). The box below shows how to make this groove at the table saw with a dado blade. The same principle can be applied to do it at the router table as well. The cork is adhesive backed and can be cut and installed (refer to Sources on page 66).

**ASSEMBLY.** Grab the glue bottle and a few clamps. It's time to assemble the sides, shelf, and bottom. Once the project is in clamps and you've calmed down from the frenzy, you can measure for the final size (length) of the drawer dividers.

Apply a bit of glue to the front of each dado and slide the dividers into place. The front edges should be flush. Then allow the glue to dry for a few hours.

## SHALLOW GROOVE

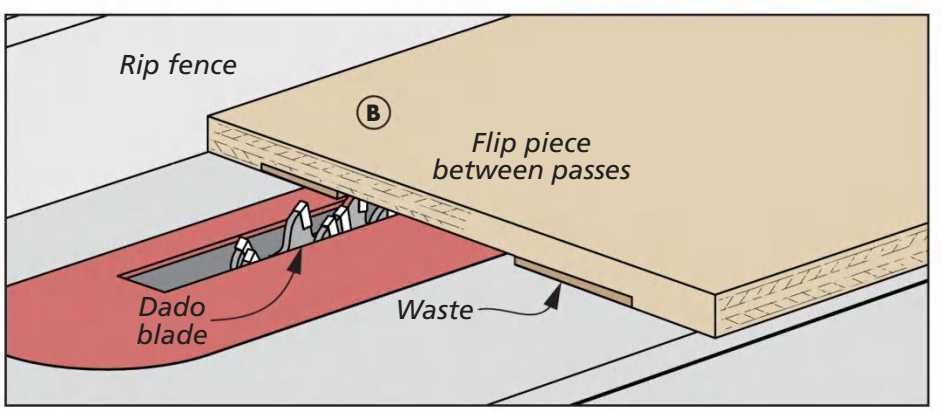


**Really Wide Groove.** Roughly center the dado blade on the shelf. Make a pass, then flip it around and repeat. Adjust the rip fence and make more passes until the cork fits in place.

# Installing the **TOP RAIL**

The main part of the shelf is complete and so it's on to the final details and storage features of the project. We'll look at the top rail and then the drawers. In keeping with the rest of the project, these additions contain recognizable steps.

**TOP RAIL.** Let's begin with the rail. This fits into the notches on the upper back of the sides, as you can see in detail 'b' below. The rail is made from plywood, just like the other parts.

The ends of the rail extend beyond the sides to improve the appearance of the shelf. These extensions have a radius shaped on the lower edge. Detail 'a' shows the dimensions.

A band saw or jigsaw are the two tools I usually think of when making these cuts. In either case, blade marks and any inconsistensies in following the layout line have to be addressed. I usually start with a coarse file to work up to the lines, then switch to a sanding block to create smooth edges. If you have an edge sander, will satisfy the speed and power tool itch you may crave.

**DRILL SOME HOLES.** Time to step over to the drill press and knock out a few holes. First, up are a row of evenly spaced holes that accept the stem of Shaker-style pegs. The ones I used require a ½"-dia. hole. Again, the dimensions for locating the holes appear in detail 'a.'

The other holes you can drill are countersunk shank holes for attaching the rail to the sides. The countersink is on the back face (detail 'b').

Clamp the rail in position on the assembled shelf and use the shank holes as a guide for drilling pilot holes in the sides. Then take care when installing the screws. Since you're driving them into the edge grain

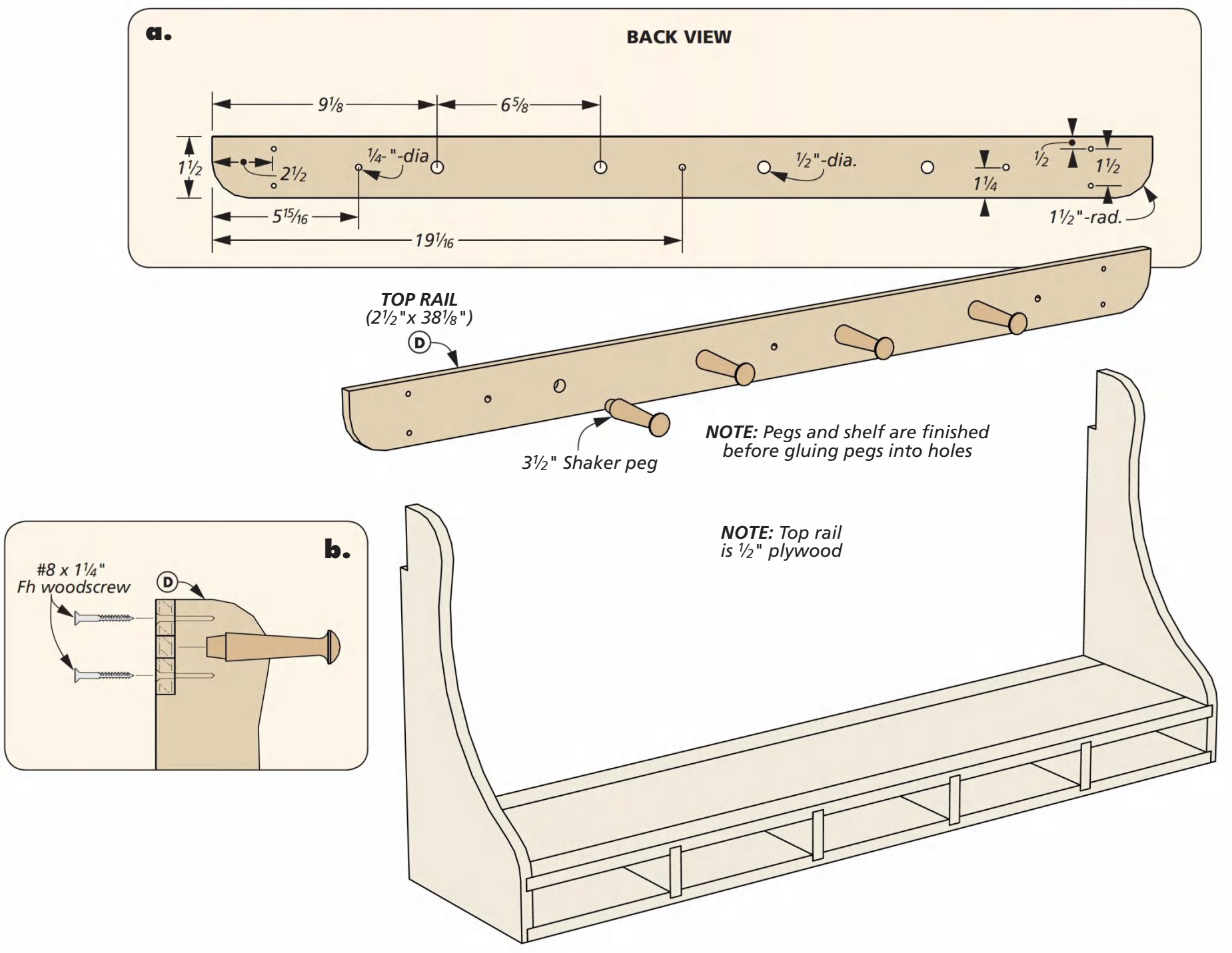

of plywood, there is the risk of splitting the workpiece. I can be a little nervous about this, so I squeeze a handscrew clamp on the piece that receives the screws, which prevents a split from forming.

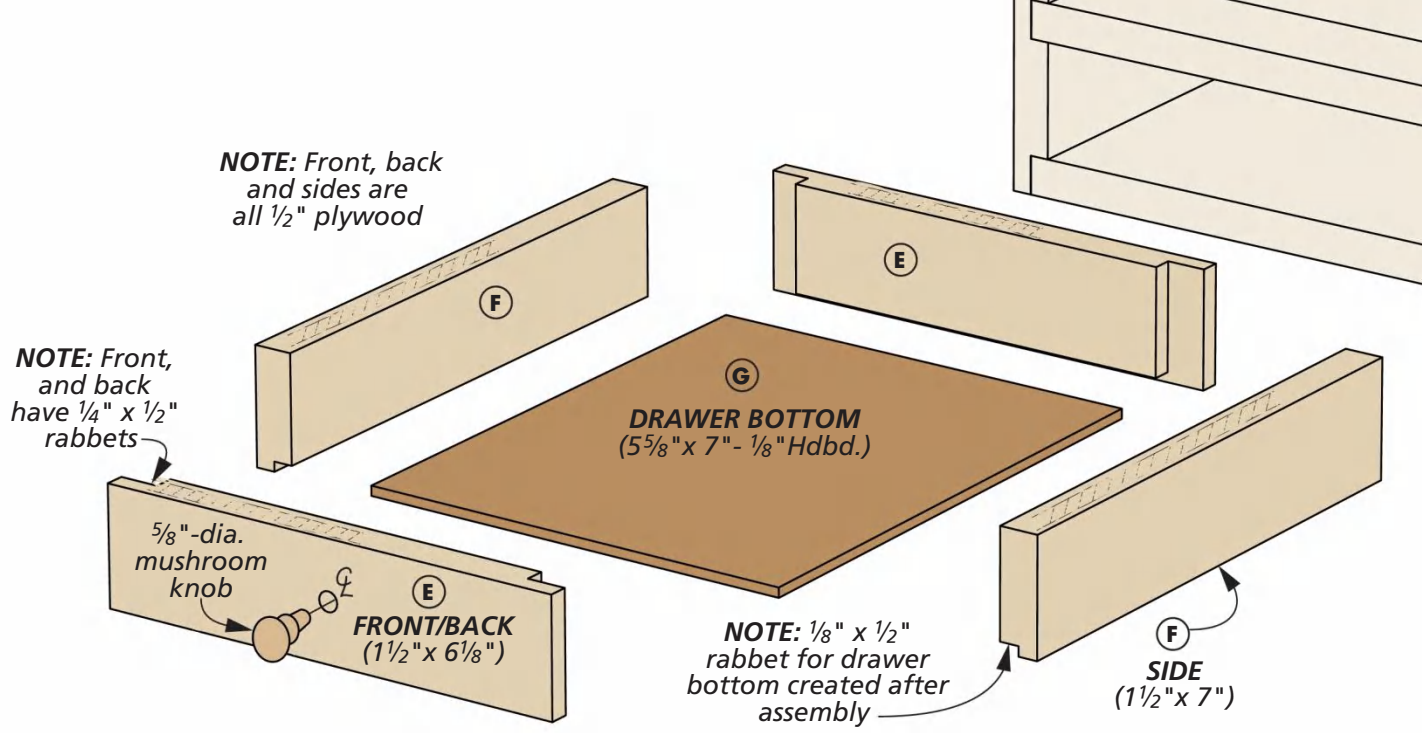


## BUILDING SMALL DRAWERS

The five drawers are all you have left to make. The construction is shown in the drawing at right. These are meant to hold 5" sanding discs. So honestly, these drawers won't see much stress. This also allows you to use joinery methods that are appropriate for the intended use.

**RABBETS IN THE CORNER.** The front and back are joined to the sides with rabbets, as illustrated in Figure 1 below. As before, a straight bit in the router table creates crisp cuts.

From here, the drawer boxes can be glued up. To maximize the interior space of the drawer, the bottom fits into another rabbet routed in the lower edge of the box, as you can see in Figure 2. The rabbeting bit can't reach into the corners, so you'll need to finish those up with a chisel by hand (Figure 2a).

**DRAWER STOPS.** The drawers are meant to be flush with the front of the shelf. So I cut small drawer stops and glued them to the bottom from the back. This way any variation in the drawer won't affect the appearance.

**PAINT & FINISH.** Paint makes a great shop finish. It's durable and easy to apply. Plus, it evens out the look of the plywood without having to glue solid-wood edging to all the parts.

To keep the plywood edges from showing, sand the piece thoroughly. Two coats of paint should do the trick. The drawer knobs and Shaker pegs just need a couple coats of gel varnish. Attach the shelf to the wall by driving screws through the top rail into wall studs. Then it's time to organize. W

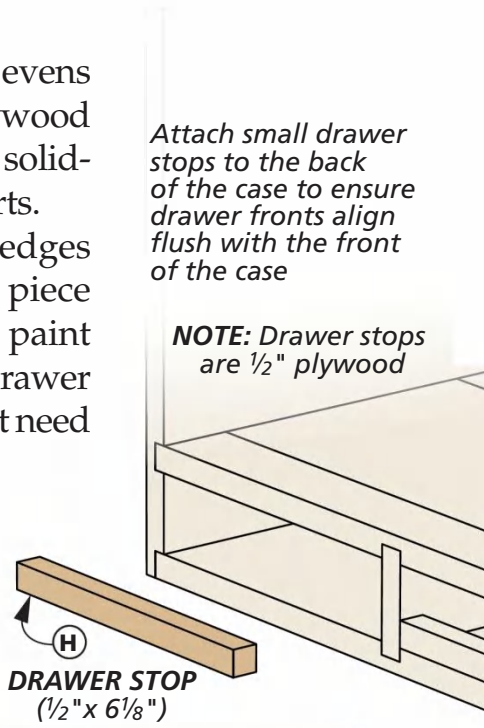


## CUTTING DRAWER RABBETS

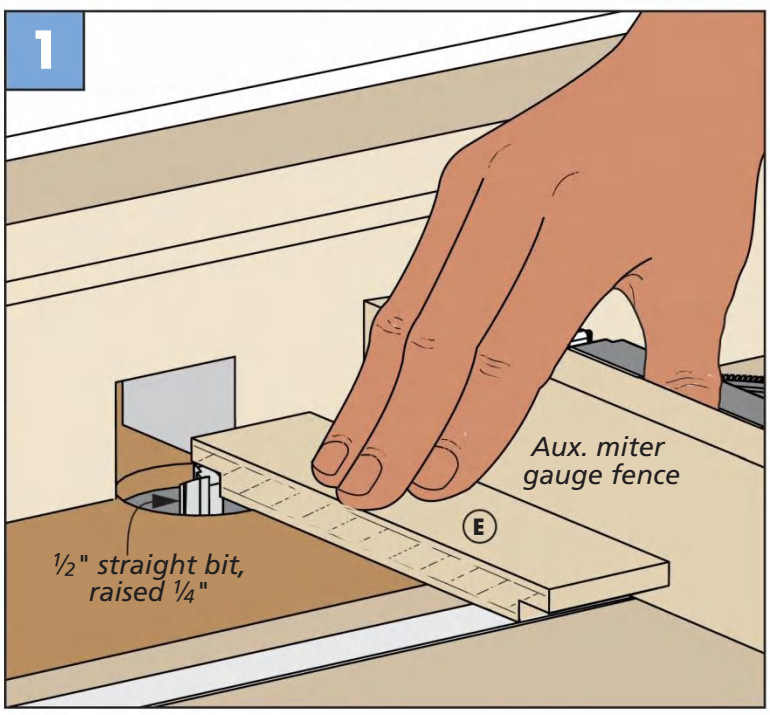


**Join the Corners.** Use a straight bit in the router table to form rabbets in the front and back. Control chipout with an auxiliary fence attached to a miter gauge.

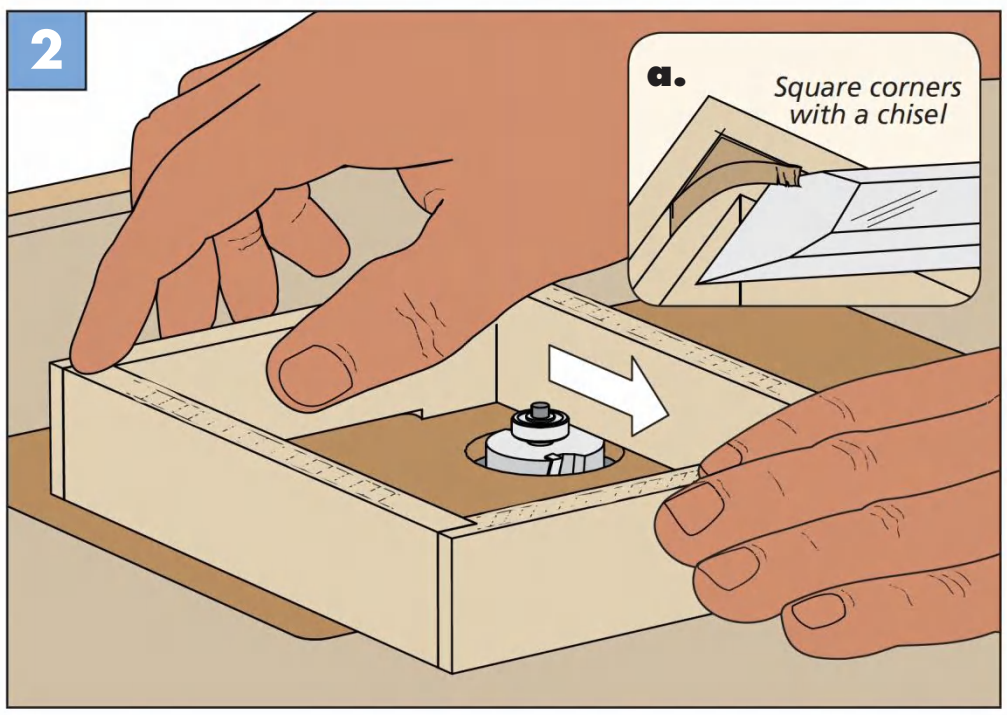


**Around the Bottom.** A bearing-guided rabbeting bit creates the recess for the drawer bottom. The bit height matches the thickness of the ⅛" hardboard used to make the bottom.

# Leather Working Tools for the Woodworker

A quick look around the shop is all it takes to come up with a few key items for cutting leather to size, as you can see here.

I'm always looking for ways to upgrade my woodworking. One unique option is to use leather. The leather can complement the project, such as using it for a drawer liner, or you can create a standalone leather project like a chisel case.

Like most hobbies, leatherworking requires some special tools. And the sky's the limit when it comes to tools and prices, but getting started doesn't have to break the bank when it comes to the basics. Many of the tools you already use in your woodworking will do just fine.

## CUTTING

Creating parts in leatherworking isn't all that different than woodworking, it often starts with cutting parts to size. And while there are specialized leather cutting tools, basic items, like the ones shown at left, will do just fine. Plus, you're likely to have them hanging around the shop already.

**UTILITY KNIFE.** For the basic sizing and general trimming I do, a simple utility knife works great for leather. I prefer ones with retractable or folding blades. This way, I don't have to worry about catching myself on the blade if it's laying on the bench.

The key with using a utility knife is making sure you start any new project with a fresh blade. And any time you feel it "dragging" during a cut, switch



Written by: Bryan Nelson

To avoid cutting into a pattern, use a scratch awl to trace the shape onto the leather. Then, you can make your cuts using the marks as a guide.

Keeping a straightedge on many of your leather parts is the key to great results. A sharp knife, a straightedge for guidance, and a cutting mat to protect your benchtop will get you off to fine start.

to a new one. Blades are cheap and help save time and provide better results. A new blade helps avoid torn or rough edges, which don't look nice and are harder to finish later in the process.

**CURVES & DETAILS.** For finer cuts and tighter turns, I switch to an *X-Acto* knife. I like the #2 size. The blade is more flexible so you'll need to pay a bit more attention during the cut to keep the cut edges of the leather square.

**MATS.** Any time I make a cut, I use a cutting mat underneath my leather, like the one you see in the photo above. It not only protects your benchtop but many cutting mats have a grid you can use to help align a straightedge and size parts. In a pinch, a scrap of plywood will work. Once one side gets cut up, simply flip it over and use the other side.

**GUIDES & PATTERNS.** While many leather cuts can be made freehand, I prefer to use a straigthtedge to guide my knife as much as possible. I use a *Starrett* aluminum model for long cuts and simple steel rules for shorter needs.

Like woodworking, square cuts are important in leather. A square, like the one shown on the previous page at the lower left, comes in handy.

Many leather projects start out with patterns. To mark out your leather pieces using a pattern, a scratch awl is the tool of choice, as shown at left above. After tracing around the pattern with an awl, the tools detailed earlier will allow you to make the cuts you need.

Once your parts are sized, you'll need to join them. The solution that I find best is to use ordinary contact cement, like you see above. It dries fast, holds securely, and gets you back to work quicker.

## ASSEMBLY

Most leather projects are stitched together, and I'll get into the tools you need for that task in a little while. But before you can lay out and stitch things up, you'll need to assemble and hold the parts together.

**GLUE.** While you could use the wood glue you already have in your shop, it can be a bit challenging to position and clamp pieces together while they dry. The nice thing is you might already have what you need in your shop — contact cement.

Contact cement eliminates the need to clamp things together and waiting for the glue to dry. Joining two pieces of leather is just a matter of applying a narrow strip of cement near the edge of the inside face of the two mating pieces, like you see in the photo at left. Of course, you do need to wait for the cement to set up, but that doesn't take long. Then, align the edges and press them together. Gently hammering along the edge ensures a good bond for the next step, laying out and stitching parts together.

The basic tools and supplies for stitching and finishing your leather projects are simple and inexpensive.

## STITCHING

Joining the leather with stitches is the key to a great-looking, long-lasting project. You can see a few of the tools you'll need for this task in the photo above.

**DIVIDERS.** Stitches are what make leather projects stand out. So laying them out isn't something to leave to chance. My tool of choice is a simple pair of dividers, like you see in the photo at the lower left. The dividers make it easy to scribe straight or curved lines a consistent distance from an edge.

**CREATING HOLES.** Once the layout is complete, you're ready to create the holes using a stitching chisel, as in the lower right photo. Just rest it along the layout line you've created and use a mallet to punch through the leather. I use a rawhide mallet, but a deadblow mallet works just as well and you probably already have one in your shop. When you come to curves, a chisel with fewer prongs (or even just one) allows you to follow the curve or arc smoothly.

You'll need a solid surface under your leather as you work with the chisel. But you don't want the surface to damage the chisel points, so I use a hard rubber mat. You can see the type of mat I use in the photo above. A scrap piece of leather underneath helps keep the prongs in great shape.

**NEEDLES & THREAD.** Holding the leather together is the job of the thread and the saddle stitch created by using a pair of needles. Leather sewing needles are a bit heavier and blunter than a traditional sewing needle.

Leather working thread comes in wide range of types, weights, and colors. I like waxed polyester thread. I choose the weight to complement the size of the project and the leather I'm using.

**STITCHING PONY.** Since you're working with a pair of needles, holding them and the leather you're sewing can be a bit of a challenge, that's where a stitching pony comes in handy (upper left photo, next page). A pony is just a mechanism for allowing you to quickly clamp and unclamp your work without having to fiddle around. You can buy one or make your own using the plans at *woodsmith.com/251*.

One leg guides the pair of dividers along the edge of the leather while the other scribes the stitching line.

Use a mallet and stitching chisel to make quick work of forming the holes for the thread by following your layout lines.

## FINISHING

With the pieces stitched together, you're ready to prepare the edges for the final step. And that's to give them a final finish.

**EDGING.** You'll start by using an edger to remove the sharp corners along all the edges.

A stitching pony secures your leather and positions it at a comfortable working height while create the stitch using a pair of needles and thread.

After easing the corners with an edger (inset), rub some gum tragancanth along the edge and then run a slicker back and forth to burnish the edge.

This prevents the edges from "mushrooming" when you begin burnishing, which gives the edge that smooth, shiny look.

Edgers come in different sizes and work like a chisel or plane to soften the edge. (See the inset photo at the upper right.)

You'll follow up the edging with a slicker for the actual burnishing. You can see this in the upper right photo. As you rub the slicker back and forth, the friction created compresses and smooths the fibers.

Although you can burnish raw leather with just a bit of water along the edge, you'll get better results by treating the edge with gum tragacanth first (main photo, previous page). Just apply it along the edge and then run the slicker back and forth. Finishing is the key to a great-looking project, so expect to spend some time on this step.

As you expand your leatherworking, you'll find many more tools and techniques to improve your skills and the results you get. What I covered here is just the start, so grab some tools and get started! W

GO 2 Online Extras

For free Stitching Pony plans, go to:

Woodsmith.com/251


Woodworkers SHOWCASE

BRINGING CUSTOM WOODWORKERS & DISCERNING BUYERS TOGETHER.

woodworkersshowcase.com

Showcase Your Home with Custom Woodwork.

Search. Compare. Shop.

To find your one of a kind custom piece all made in the USA.

From local artisans, furniture, cabinet and architectural millwork shops.

ALL About

# Working With a Sawyer

When it comes to woodworking, one of the things that drew me in immediatley was the material that we work with. Our medium grows all around us and each tree has its own story to tell. No two trees are the same, and it's something akin to a treasure hunt when you a cut into a log. You never know what you'll find.

In recent years, I've noticed the number of people that are interested in milling their own lumber has gone through the roof. Here, I want to walk you through my experiences sawing on my own mill, and what you can expect if you hire a sawyer to cut your logs.



Written by: Logan Wittmer

## WHY MILL?

There are many different reasons that someone may decide to mill their own lumber. Most people just hate seeing a perfectly good tree get chopped into firewood or ground into mulch. Saving a log and having it sawn yields cheap lumber, and you can even make a little extra money from selling lumber or sawing for other people.

**PROCURING LOGS.** If hiring a mill (or milling your own lumber) is appealing, the next logical question is where to get the logs from? Mainly, I've found three main log sources. If you have your own land, that's a logical first choice. But probably my best source for logs comes in the form of arborists and land developers. Arborists are taking trees down daily. In my experience, if you stop and ask them if you can have a log from a tree they're removing, they're almost always willing to let you have it.

Likewise, land clearing companies often remove timber to make room for buildings. While these can be good, I've found that these can be more hit-or-miss than arborists because you'll have a short window to get logs out of a pile (picture at right) before the entire stack gets doused in diesel and burned.

## GO FIGURE!

Now let's talk about the logs and what will yield good lumber. Usually, I look for logs 16"-30" in diameter. I can fit 36" logs on my mill, but I find moving that size of log by hand is unwieldy. Check with your sawyer and see what the limitations of the logs they can handle are, both in length and cut width.

Don't feel like you have to find arrow-straight logs either. Some of the most interesting pieces of lumber I've milled have crotch sections (photo below). Even curved, twisted, or just plain ugly logs are worth grabbing. Most commercial mills will pass over these type of logs (they would make low-grade lumber), but they yield some beautiful-looking boards.

Salvaging logs from land developers usually means chains, sweat, a winch, and some hard work. However, if you're willing to dig through a log pile, you'll come across some of the most beautiful timber anywhere.

Some of the most beautiful figure can be found in the crotch section of trees. Usually, these are passed over by large-scale mills. A little water on a fresh-cut flitch will reveal the character of the wood (and no, the water doesn't hurt it).

## PORTABLE MILLS

Once you've collected (that's what I call it when my wife asks) a pile of logs, it's time to get them sawn. A quick online search of local portable sawmills will usually yield good results. That was always my process until I purchased my mill (that's one for a future article — if you're interested in purchasing a mill, reach out to me and I can help point you in the right direction).

When you find a sawyer, you're most likely to find one that has a band saw mill. These are the most common types of mill, however there are a few other styles that are a little less common. Some others you might find are chain saw mills, swing blade mills, and even a few portable circular sawmills (although, most of the circular sawmills will be setup in a permanent location). For now, let's focus on the more common band saw mill, like you see in the main photo.

Illustrations: Bob Zimmerman

Most portable saws will have beds between 14' and 20' long. On the bed, there will be a series of log stops and clamps (log dogs) to lock the log in place. A portable mill will also have an axle and leveling jacks.

**THE POWER.** In the world of band saw mills, most will be powered by either a gasoline or diesel engine, ranging from 13-27 hp. Unlike your shop saw, band saw mills require lubrication when cutting. This usually comes in the form of a tank that drips lubrication on the blade during the cut. I use water with dish soap, but many old timers swear by using diesel. The lubrication does two things. First, it helps keep the blade cool (and therefore extends the life of the blade). Second, it helps remove any pitch or sap buildup on the blade from cutting fresh logs.

**HYDRAULIC VS MEAT POWERED.** To roll the saw head down the bed, the mill will either be hydraulic or manual. Usually, a setup that includes hydraulic feed will include other accessories, such as hydraulic loading of the logs, hydraulic log clamps, log turners and toe boards.

Portable sawmills can be pulled to your house or land and setup to mill on-site. In the portable variety, band saw mills are the most common type. The band saw blade has the smallest kerf (⅛") and the fastest cut.

In a manual version (like mine), the saw head is raised and lowered with a hand crank, and the operator pushes the saw head through the log. In addition, log loading, turning, and clamping must be done manually (with some mechanical advantages). While running a manual mill is a great way to get into shape, it's also a lot of work. A 30"-diameter log can easily weigh several thousand pounds!

**MILLING PRICES.** There are two common ways a sawyer will charge for sawing. Either an hourly rate or a per-board foot rate. Personally, I feel like the hourly rate is more fair for both parties. For example, a log that is 30"-diameter and 10 foot long is 425 board feet. With a per-board foot model, cutting that log into 4"-thick boards would be the same price as cutting ½"-thick boards, even though cutting the thinner boards would take 8 times as long.

From that standpoint, I always tried to find an hourly sawyer and I would do a couple of things to help speed them up (and reduce my costs). Locally, I have worked with sawyers that have charged between $50/hr (on a manual mill) to $100/hr (for a fully hydraulic, more efficient model).

**STAGING.** The biggest thing you can do to help save time with a sawyer is to have the logs staged and ready before they arrive. You can see this in the background in above photo. This means trimming the log to size (removing limbs, cutting to length), and lining the logs up where the sawmill can be pulled up next to them. With a well-prepped log stack, an hour is enough time to get through two or three logs.

## Typical Band Saw Mill

Portable sawmills all share a common form: a movable saw head rides on a track, supported by levelers and an axle.

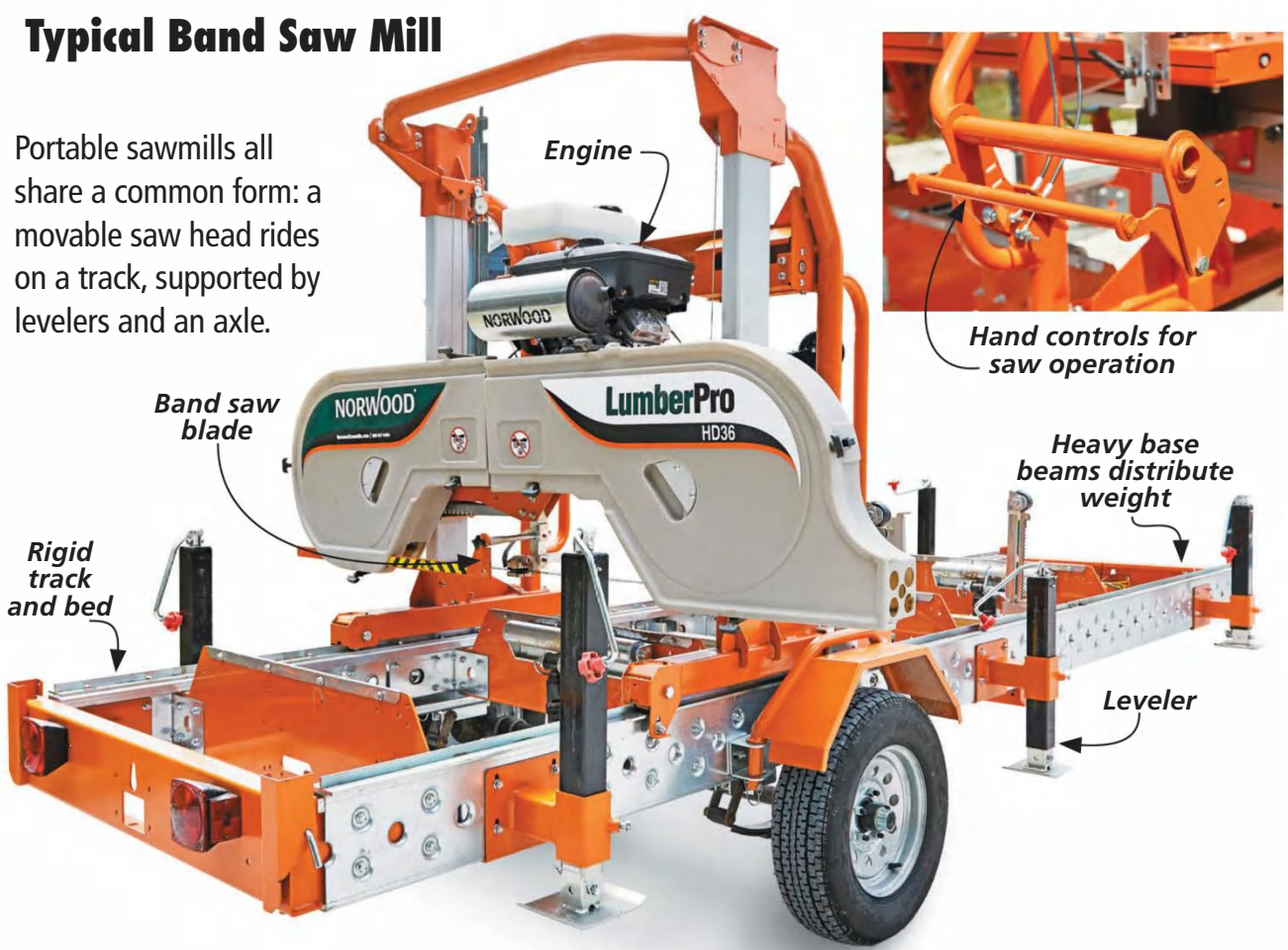

**LOADING PROCESS.** Once the mill has arrived, the sawyer will set up the mill. Depending on the mill, loading is done either with ramps or loading arms. My mill uses ramps and a winch to do a process called parbuckling — rolling the log up the ramps with the use of the winch. While it seems rudimentary, I've loaded 4,000 lb. logs, no sweat (except for the person cranking). You can see this to the right.

**POSITIONING THE LOG.** With the log on the bed, the sawyer will position the log. Often, logs are bigger on one end than the other. The small end can be jacked up with a toe board to help compensate for this taper and level the pith of the log. With the log positioned against the log stops, the log will be clamped into place with the log dogs. These keep the log from moving during sawing. Even though the log is heavy, the saw blade can exert a huge amount of force that can move the biggest of logs.

Loading can be done a number of ways. If a tractor or skid loader is available, that's the easiest and fastest. Otherwise, most mills will have a ramp system like the one shown here. Using some mechanical advantage, you can load large logs.

## CHOOSE YOUR ADVENTURE

Before the first cut is made, there are a few things you need to consider — how to cut the log and how thick to cut it. Luckily, a competent sawyer can help you make some of these decisions.

**SAWING PATTERN.** The two most common sawing patterns can be seen in the illustrations below. My preferred sawing method is called live-sawing (some call it "slabbing"). It involves cutting straight through the log, leaving the bark on both edges of the board (known as a flitch). You can see this in the top illustration at left. This cutting pattern is the easiest to air dry in my opinion (the bark helps shed rain when stacked in log form). Plus, it yields a combination of plain, rift, and quartersawn material.

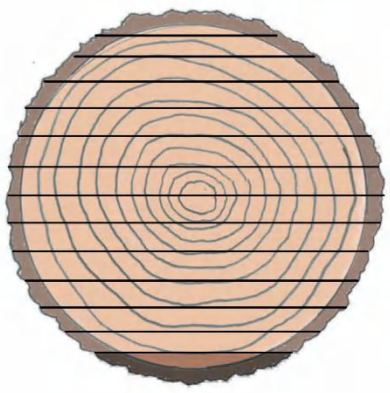

Live sawing is making cuts straight through the log, leaving the bark on both sides. For this, the log needs to be smaller than the guides on the mill (28" in my case). Usually, the lower bark cap is discarded and the top one covers the stack.

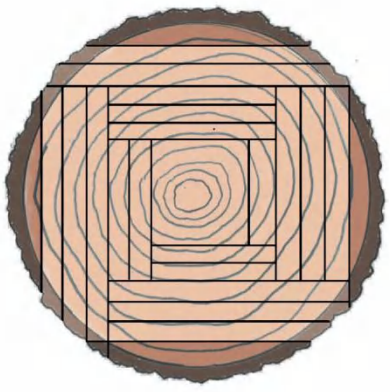

Plain sawing removes four sides of bark to turn the log into a cant. Then, the cant will be sawn down into boards, and I usually leave the center of the log (with the pith) as beams for workbench parts or fireplace mantles.

**PLAIN-SAWN.** The next pattern is plain-sawn. This involves turning the log into a square cant, then cutting square boards off the cant. This can be done in such a way that the boards all have (pretty much) uniform growth rings and dry consistently. It yields edged lumber, but it will need to be covered as it dries to protect it from rain. Sawing in this pattern is slower than live-sawing, but not as slow as quartersawn. Often, I will leave the center of the log (the pith included) as a beam — usually 5"x 5" or 6"x 6".

**THICKNESS.** When it comes to board thickness, my preference is to cut almost everything 8/4. I find it tends to dry flatter, and you have the ability to resaw it later. It's more work to glue stock up later than it is to resaw it. A tradeoff is that it takes longer to dry the thicker stock.

While removing the sawdust during sawing seems unnecessary, it allows you to see the grain of what you're cutting, and I've found that excess sawdust can hold moisture and cause mold growth.

For drying, a shady spot with good air movement is ideal. Use spacers (known as stickers) to separate the lumber. Ensure that your base is level and keep the stickers in line with the base and each other.

### MAKING CUTS

After setting the saw head height, the sawyer will make the cuts to produce your boards. And honestly, it's usually pretty much what you'd expect of a band saw (unless you hit a nail, or two ... or three). It's always good to have a helper available to unload boards as they're cut (they're wet and heavy). This will help speed the sawyer up and reduce your cost.

**AFTER MILLING.** As a final note, ask the sawyer for tips on drying your lumber. I'll put an article up on *woodsmith.com/251* on my drying process (and maybe a future magazine article, as well). The two photos above show how I start my drying. It's not as exciting as cutting the lumber, but I think it's probably the most important part of the process. A lot of good lumber has been ruined by poor drying.

Am I telling you to stash every log you can find in your yard so you can saw them? Maybe. But I don't want any e-mails from significant others complaining about the new lawn ornaments. But in all seriousness, I think the first time you cut a piece of lumber from a log, it's almost magical. Once you have a pile of lumber drying, and sawdust in your veins, you may never go to a hardwood dealer again. W

## MY NORWOOD HD36

When I started looking for my own sawmill, I looked at almost every brand available. The mill that fit my needs the best (a combination of capacity, ease-of-use, and price) was the *Norwood HD36*. As-is, it will handle logs up to 13' long and up to 36"-diameter. And trust me, that's a big log. One of the many things that I like about the *Norwood* mill is that it's upgradable. I purchased the basic manual mill with trailer package first. In a few years, I have the option of adding hydraulics. This one can grow with me as I need it to. With almost all other brands, you must order the mill as you want it.

If you'd like to see the the assembly process for my mill, you can check out the video at: *woodsmith.com/251*. I'm also very excited to start producing some sawmilling content and sharing it with everyone. You will find that on our YouTube channel: *youtube.com/user/WoodsmithShop*

With a little bit of work, a band saw mill will often pay for itself. Between sawing for customers and cutting and selling lumber, it made the investment much more approachable for me (and easier to get my wife onboard).

SEPTIMBER
a monthlong celebration of...
craft
community
companies

TIMBER FRAMERS GUILD

Learn more at tfguild.org.
Contact us info@tfguild.org.

Join us throughout the month of September to celebrate our craft, community, and companies. Learn about our member companies and the Guild through stories of projects and people.

**Do you know of a community that could benefit from a public timber frame structure? Contact us! Do you have a passion for timber framing? Join us!**

The Timber Framers Guild is an international community of craftspeople working together to teach, learn and elevate the art and science of timber framing. Our companies support the education of aspiring timber framers, research to continue the evolution of timber framing, and celebrate the strength, beauty and longevity of this sustainable craft. Join us as we "enrich community through craft."

# Sources

## MAIL ORDER SOURCES

Amazon
amazon.com

American Woodcrafters Supply
800-995-4032
americanwoodcrafterssupply.com

Horton Brasses
800-754-9127
horton-brasses.com

McMaster-Carr
630-833-0300
mcmaster.com

Online Metals
onlinemetals.com

Rockler
800-279-4441
rockler.com

Woodturners Wonders
woodturnerswonders.com

Most of the materials and supplies you'll need to build the projects are available at hardware stores or home centers. For specific products or hard-to-find items, take a look at the sources listed here. You'll find each part number listed by the company name. See the left margin for contact information.

### SHARPENING TURNING TOOLS *(p.14)*

- **WoodTurners Wonders**
  *Spartan CBN Wheel* . . . . Varies
- **Amazon.com**
  *Wolverine Jig* . . . . B01JAPC6D4

### MITER PLANE *(p.42)*

- **OnlineMetals.com**
  *3/16" Bronze* . . . . . 21583
  *1/8" Bronze* . . . . . 20545
  *1/8" O1 Tool Steel* . . . . . 7153
- **Amazon.com**
  *Peacock Oil* . . . . . B07PRTR8ZT

### KITCHEN CART *(p.26)*

- **McMaster-Carr**
  *3/4" Nylon Bushing* . . 6389K226
- **Rockler**
  *120° Overlay Hinge* . . . . 55793
  *90° V-groove bit* . . . . . 51079

The cart was finished with *General Finishes* "Black" gel stain. After staining, the cart was sprayed with a couple of coats of lacquer. The maple top and wheel assembly was finished with *Boos* butcher block oil. This is available online from amazon.com

### PIECRUST TABLE *(p.34)*

- **Horton Brasses**
  *Tip Table Catch* . . . . . H-43-H-43

The table was first sprayed with a coat of lacquer. Then *General Finishes* "Java" gel stain was hand-rubbed in. Then topped off with lacquer that was tinted with *TransTint* dye, Medium Red and Brown. (A teaspoon of each in a quart of lacquer.) This was sprayed through a .8mm nozzle.

### SANDER SHELF *(p.50)*

- **McMaster-Carr**
  *Cork Pad* . . . . . 9487K53
- **American Woodcrafters Supply**
  *5/8"-dia. Knobs* . . . . . KB-058
  *3½" Shaker Pegs* . . . . . SP-400

The shelf was painted with two coats of *General Finishes* "Blue Moon" milk paint. The drawer pulls and Shaker pegs have a couple coats of oil applied to provide contrast.

### LEATHER TOOLS *(p.56)*

- **Amazon.com**
  *Poundo Board* . . . . B0764YLR2M
  *Edging Tools* . . . . . B081L69PQH
  *Slicker* . . . . . B088JZNWPJ
  *Gum Tragacanth* . . . B01LJQILZ4
  *Stitching Chisel Set* B0771KP73Y
  *Stitching Needles* . . B00114RBSI


# LIVE MONTHLY SEMINARS
## from the Editors of *Woodsmith*

- ✓ **Find out about new skills**
- ✓ **Get more from your tools**
- ✓ **Live questions and answers**
- ✓ **Learn from the staff of *Woodsmith* magazine**
- ✓ **Free on-demand access to all 2019 Seminars**

You can purchase the Woodsmith **LIVE Seminars** individually for $14.95 each, or opt for our All Access pass to gain access to every seminar produced through the end of 2020.

The Best is Now Even Better...

# Woodpeckers®

# Slab Flattening Mill PRO

NEW TOOL

## Wider, Thinner, Thicker & Cleaner...

**Woodpeckers Slab Flattening Mill PRO** has all the best features of our original Slab Flattening Mill, but with a new router carriage that has an amazing range of adjustment, working with stock as thin as 3/4" and up over 3" without spacers or shims. Dust collection is now built right into the carriage with twin collection ports that collect equally well on push or pull cuts. We reinforced the frame of the router carriage for even better surface flatness and finish.

Like the original, the Slab Flattening Mill PRO and your router can surface irregularly shaped and twisted slabs into stunning table, counter and shelf surfaces. With a standard width capacity of 48-1/2" and optional extensions available, there's no slab project you can't master.

Learn more about Woodpeckers Slab Flattening Mill PRO at ***woodpeck.com***

Woodpeckers, LLC • Strongsville, Ohio • 800.752.0725 • ***woodpeck.com***

# RIKON®

# EXPANDING ⬅ The ➡ Possibilities

5 YEAR WARRANTY

## Expandable Bed Lathe | 40" Between Centers  Beefy | 3 HP VSR Motor

Beefy **3HP motor** delivers ample power to turn large diameter projects in forward or reverse modes.

**Control Box** has a magnetic back so that it can be set anywhere along the lathe for quick access when turning.

**1-1/4" x 8 TPI threaded spindle** is supported by 4 heavy-duty bearings for precise and dependable turning.

Tailstock's quill extends out to a generous **4-3/4" RAM** travel with precision Acme threading.

Call today for more information **877-884-5167**
or visit **www.rikontools.com** for a dealer near you!

# Woodsmith

## Back Issue Library **Online**

# An Incredible **VALUE!**

- Access every issue of Woodsmith ever published — over 228
- Get over 4,000+ projects, tips and technigues.
- Enjoy instant online access on your computer, laptop — even tablet.

**LEARN MORE** at www.woodsmithlibrary.com

# Sign Up for Free Weekly eTips

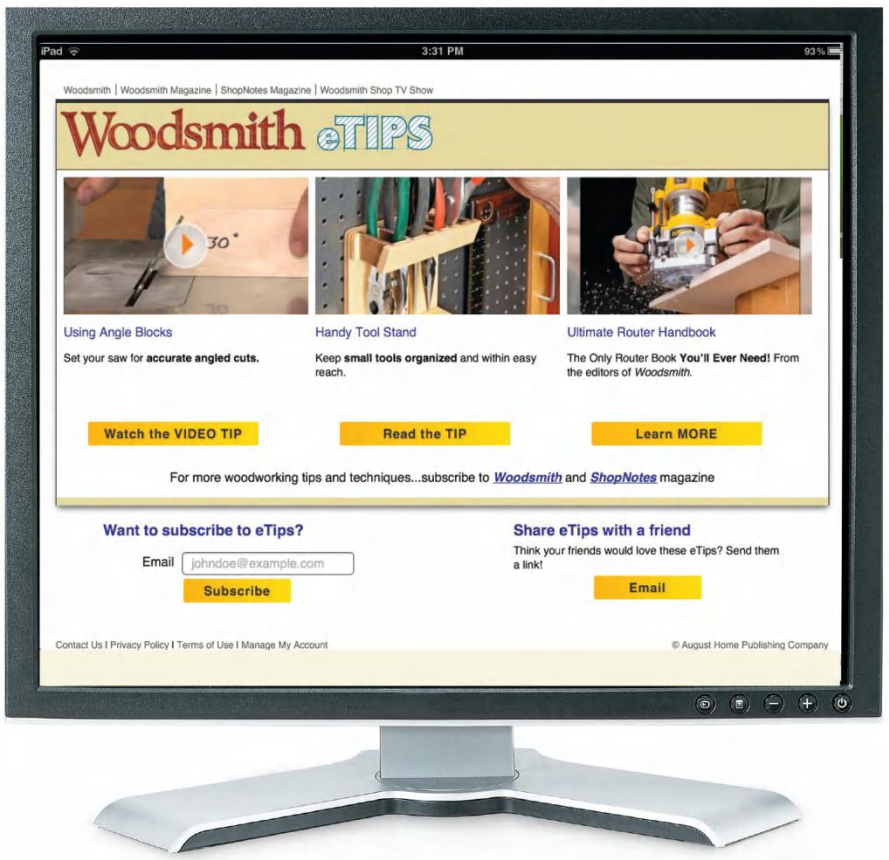


Desktop

- Get a video tip sent to you every week
- Includes a printable, step-by-step tip
- Ready when you are — on any device

Laptop

Tablet

Smartphone

Sign up today at Woodsmith.com